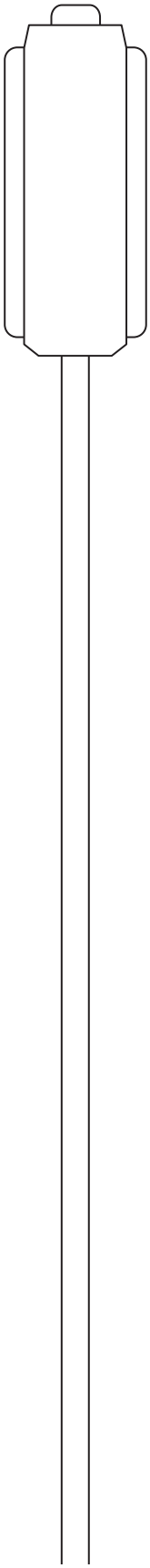

LifeCare™ 4100

PCA PLUS AND PLUS II SERIES INFUSERS

For use with list numbers 1950-04 and 1950-13

Technical Service Manual

430-04502-005 (A, 11/10)

Hospira

This page intentionally left blank.

Change History

Part Number	Description of Change
430-04502-001 (Rev. 06/93)	Original Issue Replaces 430-04461-001 and 430-04287-002
430-04502-A01	Change Page Issue Update Cover, Copyright, and Change History Update PCA + continuous test in Section 5 Update syringe empty switch adjustment procedure
430-04502-B01	Change Page Issue Update Cover, Copyright, and Change History Revise Section 1 Update Section 4.3.3 Update Table 5-1 Update Section 6.1 Update Section 7.2.7.4, Section 7.3.19, and Section 7.3.43 Add Index Update back page
430-04502-002 (Rev. 02/95)	Second Issue
430-04502-003 (Rev. 04/99)	Third Issue
430-04502-004 (Rev. 09/06)	Fourth Issue Incorporate Hospira name change and update to current style
430-04502-005 (Rev. 11/10)	Fifth Issue Update occlusion test and electrical safety test in Section 5 Update troubleshooting tables in Section 6 Update AC power cord replacement procedure in Section 7 Update specifications in Section 8 Update graphics throughout

This page intentionally left blank.

Contents

Section 1

Section 2

Section 3

Section 4

Section 5

Section 6

Section 7

Section 8

Section 9

Figures

Tables

This page intentionally left blank.

Section 1
INTRODUCTION

The LifeCare™ PCA Plus and Plus II Series infusers provide analgesic delivery to patients through the intravenous or epidural routes in a wide range of clinical settings.

1.1
SCOPE

This manual is organized into the following sections:

- ❑ Section 1 Introduction
- ❑ Section 2 Warranty
- ❑ Section 3 System Operating Manual
- ❑ Section 4 Theory of Operation
- ❑ Section 5 Maintenance and Service Tests
- ❑ Section 6 Troubleshooting
- ❑ Section 7 Replaceable Parts and Repairs
- ❑ Section 8 Specifications
- ❑ Section 9 Drawings
- ❑ Index
- ❑ Technical Service Bulletins

If a problem in device operation cannot be resolved using the information in this manual, contact Hospira *(see Section 6.1)*.

Specific instructions for operating the device are contained in its respective *System Operating Manual*.

The terms “infusion system”, “infuser”, and “device” are used interchangeably throughout the manual.

Figures are rendered as graphic representations to approximate actual product. Therefore, figures may not exactly reflect the product.

Screen representations are examples only, and do not necessarily reflect the most current software version.

1.2 CONVENTIONS

The conventions listed in *Table 1-1* are used throughout this manual.

Table 1-1. Conventions

Convention	Application	Example
Italic	Reference to a section, figure, table, website, or publication	*(see Section 6.1)*
[ALL CAPS] **ALL CAPS**	In-text references to keys, touchswitches, and display messages	**[LOADING DOSE]** **ADMINISTER LOADING DOSE NOW?**
Bold	Emphasis	**CAUTION: Use proper ESD grounding techniques when handling components.**

Throughout this manual, warnings, cautions, and notes are used to emphasize important information as follows:

WARNING: A WARNING CONTAINS SPECIAL SAFETY EMPHASIS AND MUST BE OBSERVED AT ALL TIMES. FAILURE TO OBSERVE A WARNING MAY RESULT IN PATIENT INJURY AND BE LIFE-THREATENING.

CAUTION: A CAUTION usually appears in front of a procedure or statement. It contains information that could prevent hardware failure, irreversible damage to equipment, or loss of data.

Note: A note highlights information that helps explain a concept or procedure.

1.3 ACRONYMS AND ABBREVIATIONS

Acronyms and abbreviations used in this manual are as follows:

AC Alternating current

ADC Analog-to-digital converter

BRD Bus read

BWR Bus write

cm Centimeter

CPU Central processor unit

CS Chip set

dB Decibel

DC Direct current

DPM Digital pressure meter

ECG	ELectroencephalogram
EKG	Electrocardiograph
EMG	Electromyogram
EPROM	Erasable/programmable read-only memory
ESD	Electrostatic discharge
ETO	Ethylene oxide
Hr	Hour
IC	Integrated circuit
I/O	Input/output
kPa	Kilopascal
LCD	Liquid crystal display
LED	Light emitting diode
LIM	Limit
mA	Milliampere
MALF	Malfunction
MCS	Main control switch
mg	Milligram
MHz	Megahertz
mL	Milliliter
ms	Millisecond
mV	Millivolt
PCA	Patient-controlled analgesia
PPI	Programmable peripheral interface
psi	Pounds per square inch
psig	Pounds per square inch gauge
PVT	Performance verification test
PWA	Printed wiring assembly
RAM	Random-access memory
RD	Read
ROM	Read only memory
V	Volt
VDC	Voltage direct current
VAC	Voltage alternating current
WR	Write
μA	Microampere
μg	Microgram
μs	Microsecond

1.4 USER QUALIFICATION

The infusion system is intended for use at the direction or under the supervision of licensed physicians or certified healthcare professionals who are trained in the use of the infuser and the administration of parenteral or enteral fluids or drugs.

1.5 ARTIFACTS

Nonhazardous, low-level electrical potentials are commonly observed when fluids are administered using infusion devices. These potentials are well within accepted safety standards, but may create artifacts on voltage-sensing equipment such as ECG, EMG, and EEG machines. These artifacts vary at a rate that is associated with the infusion rate. If the monitoring machine is not operating correctly or has loose or defective connections to its sensing electrodes, these artifacts may be accentuated so as to simulate actual physiological signals.

To determine if the abnormality in the monitoring equipment is caused by the infuser instead of some other source in the environment, set the device so that it is temporarily not delivering fluid. Disappearance of the abnormality indicates that it was probably caused by electronic noise generated by the infusion device. Proper setup and maintenance of the monitoring equipment should eliminate the artifact. Refer to the appropriate monitoring system documentation for setup and maintenance instructions.

1.6 INFUSION SYSTEM INSTALLATION

CAUTION: Infusion system damage may occur unless proper care is exercised during product unpacking and installation.

CAUTION: Infusion system performance may be degraded by electromagnetic interference (EMI) from devices such as electrosurgical units, cellular phones, and two-way radios. Operation of the infusion system under such conditions should be avoided.

Infusion system installation consists of unpacking, inspection, and self test.

✎ **Note:** Do not place the infuser in service if the battery is not fully charged. To make certain the battery is fully charged, connect the infuser to AC power for 24 hours.

1.6.1 UNPACKING

Inspect the shipping container as described in *Section 1.6.2*. Use care when unpacking the infusion system. Retain the packing slip and save all packing material in the event it is necessary to return the infuser to the factory. Verify the shipping container contains a copy of the *System Operating Manual*.

1.6.2 INSPECTION

Inspect the shipping container for damage. Should any damage be found, contact the delivering carrier immediately.

CAUTION: Do not use the device if it appears to be damaged.

Inspect the infusion system periodically for signs of defects such as worn accessories, broken connections, or damaged cable assemblies. Also inspect the infuser after repair or during cleaning. Replace any damaged or defective external parts.

1.6.3 SELF TEST

CAUTION: Do not place the infuser in service if the self test fails.

✎ **Note:** Do not place the infuser in service if the battery is not fully charged. To make certain the battery is fully charged, connect the infuser to AC power for 24 hours.

✎ **Note:** When plugging the device into an AC power outlet, grasp the AC power cord plug and use a forward motion into the socket. Do not use a sideways motion. When unplugging the device, grasp the AC power cord plug and pull straight out. Do not pull out using the power cord cable and do not pull out at an angle.

To perform the self test, proceed as follows:

1. Unlock and open the security door.
2. Connect AC power cord to a properly grounded AC outlet. Confirm that the AC power symbol on the front panel is illuminated.
3. Press and release the **[ON]** touchswitch. The infuser performs a self test verifying its functional integrity. If the infuser fails the self test, contact Hospira.
4. **PCA Plus II only**: Set the real time clock as described in *Section 7.2.9*.

This page intentionally left blank.

Section 2

WARRANTY

Subject to the terms and conditions herein, Hospira, Inc., hereinafter referred to as Hospira, warrants that (a) the product shall conform to Hospira's standard specifications and be free from defects in material and workmanship under normal use and service for a period of one year after purchase, and (b) the replaceable battery shall be free from defects in material and workmanship under normal use and service for a period of 90 days after purchase. Hospira makes no other warranties, express or implied, and specifically disclaims the implied warranties of merchantability and fitness for a particular purpose.

Purchaser's exclusive remedy shall be, at Hospira's option, the repair or replacement of the product. In no event shall Hospira's liability arising out of any cause whatsoever (whether such cause be based in contract, negligence, strict liability, other tort, or otherwise) exceed the price of such product, and in no event shall Hospira be liable for incidental, consequential, or special damages or losses or for lost business, revenues, or profits. Warranty product returned to Hospira must be properly packaged and sent freight prepaid.

The foregoing warranty shall be void in the event the product has been misused, damaged, altered, or used other than in accordance with product manuals so as, in Hospira's judgment, to affect its stability or reliability, or in the event the serial or lot number has been altered, effaced, or removed.

The foregoing warranty shall also be void in the event any person, including the Purchaser, performs or attempts to perform any major repair or other service on the product without having been trained by an authorized representative of Hospira and using Hospira documentation and approved spare parts. For purposes of the preceding sentence, "major repair or other service" means any repair or service other than the replacement of accessory items such as batteries and detachable AC power cords.

In providing any parts for repair or service of the product, Hospira shall have no responsibility or liability for the actions or inactions of the person performing such repair or service, regardless of whether such person has been trained to perform such repair or service. It is understood and acknowledged that any person other than a Hospira representative performing repair or service is not an authorized agent of Hospira.

This page intentionally left blank.

Section 3

SYSTEM OPERATING MANUAL

A copy of the *System Operating Manual* is included with every LifeCare PCA Plus and Plus II Series infusion system. If a copy is not available, contact Hospira *(see Section 6.1)*.

This page intentionally left blank.

Section 4

THEORY OF OPERATION

This section describes the theory of operation for the LifeCare PCA Plus and Plus II Series infusers. The theory of operation details the general functions, electronics overview, and mechanical overview.

4.1 GENERAL FUNCTIONS

This section describes the general functions of the infuser.

4.1.1 STARTING OPERATION

The infuser is powered on by inserting or removing a vial, or by pressing the **[ON]** touchswitch. Once powered on, the infuser begins a warm-start or a cold-start sequence, depending on the time elapsed since the **[OFF/RECHG]** touchswitch was last pressed.

4.1.1.1 WARM-START SEQUENCE

The infuser initiates a warm-start sequence if it is powered on within 60 minutes of previous operation. In the warm-start sequence, all previous therapy parameters and dose history information are retained in memory. Before the infuser can operate, previous settings must be confirmed or cleared. If previous settings are cleared, the user must program the infuser with new therapy parameters.

4.1.1.2 COLD-START SEQUENCE

The infuser initiates a cold-start sequence if it is powered on after 60 minutes since previous operation. The infuser also initiates a cold-start sequence if the **[OFF/RECHG]** touchswitch is pressed for approximately four seconds to clear all memory.

After 60 minutes, most major electronic circuits turn off and all therapy settings and dose history data are lost. During a cold-start sequence, a self test is performed to verify the functional integrity of the infuser. After successful completion of the self test, the infuser must be reprogrammed with new therapy parameters.

4.1.2 SETUP

During setup, the liquid crystal display (LCD) screen displays prompts for each step of programming the infuser. The infuser must be programmed before it will operate.

4.1.3
DELIVERY MECHANISM

The delivery mechanism is actuated by a four-phase stepper motor that controls delivery, and constantly monitored by the infuser electronics.

4.1.4
PATIENT CONTROLLED ANALGESIA

When the infuser is operating in either the **PCA** or the **PCA + CONTINUOUS** modes, the patient can initiate a request for analgesia by pressing the patient pendant pushbutton. The patient request is answered based on the status of the lockout interval and the four-hour dose limit. A dose is delivered only if the lockout interval has expired and the four-hour dose limit has not been reached. Timing of the lockout interval and the four-hour dose limit is programmed by the medical professional, and is maintained by the central processor unit (CPU). The four-hour dose limit is the maximum PCA dose deliverable by the infuser in any rolling four-hour period.

✎ **Note:** The **PCA Plus II** will not discontinue an individual dose upon reaching the four-hour dose limit. The dose continues until completion.

4.1.5
STATUS MESSAGES

Infuser status is displayed on the LCD screen during normal operation. Status messages are listed in *Table 4-1*.

Table 4-1. Status Messages and Definitions

Message	Definition
DOOR LOCKED	Displays for 30 seconds when the security door is closed and locked
PATIENT LOCKOUT	Displays after a successful patient-initiated dose delivery Message remains until the lockout interval elapses Message appears only when the security door is locked and the infuser is in PCA or PCA + CONTINUOUS mode
4 HR LIMIT REACHED	Displays if four-hour dose limit is enabled and the limit is reached with the security door locked
*** * ***	Indicates the patient can initiate a dose in PCA or PCA + CONTINUOUS mode
PCA	Displays when the infuser is in PCA mode
CONTINUOUS	Displays when the infuser is in CONTINUOUS mode
PCA + CONTINUOUS	Displays when the infuser is delivering a PCA dose in addition to a continuous delivery in the PCA + CONTINUOUS mode

4.2 ELECTRONICS OVERVIEW

Note: A vinculum (overscore) above a signal designation (e.g., $\overline{BWR}$) denotes an active low signal.

The infuser electronics system contains the CPU/display printed wiring assembly (PWA) and the power supply PWA. The microprocessor on the CPU/display PWA communicates with components on both PWAs through an 8-bit data bus (D7-D0) and a 16-bit address bus (A15-A0).

Low-level signals from the front panel touchswitches and sensor switches are input directly by the CPU/display PWA where they are placed in buffers on the microprocessor data bus. Data buffers on the CPU/display PWA also receive input from the power supply PWA.

Primary AC power is routed through line fuses F1 and F2 to the primary of the power transformer T1. Low level alternating current (AC) from the secondary of T1 is applied to a rectifier, CR14, on the power supply PWA. The direct current (DC) output of CR14 connects to the battery input and battery charger circuitry on the power supply PWA. The power supply PWA provides +5 VDC logic power, drivers for the drive motor, power to the audible alarm, access to test points throughout the system through a test port, and a printer/Dataway port.

4.2.1 CPU/DISPLAY PWA

The CPU/display PWA contains the following:

- 8032 single-chip microprocessor containing read-only memory (ROM), random access memory (RAM), 8-bit input/output (I/O) port, two timer circuits, 64K addressing capability, and 8-bit data bus
- 32K erasable/programmable read only memory (EPROM) for firmware program storage, including all CPU firmware
- 8K static RAM mounted in a socket that contains a real-time clock chip that can be read from and written to by the 8032 microprocessor. A battery in the socket supplies power to the real-time clock when logic power is turned off
- Watchdog circuit that sounds an alarm if the 8032 microprocessor does not execute a code as designed or does not start up properly
- DC-to-AC converter that provides power for the electroluminescent panel on the LCD screen
- LCD containing its own controlling circuitry on a PWA connected to the CPU/display PWA
- Light emitting diode (LED) displays five seven-segment LEDs, one single LED, and two multi-LEDs, along with driving, multiplexing, and monitoring components
- Eight-channel analog-to-digital converter that monitors the +5 VDC power supply, the +2.5 VDC precision voltage reference (used to regulate the +5 VDC supply and the battery monitoring circuits), and the current consumption of the LEDs

4.2.1.1
CPU/DISPLAY PWA SYSTEM INTERFACES

The CPU/display PWA interfaces with the front panel touchswitches, the LCD screen, and the power supply.

The 12 front panel touchswitches interface with the CPU/display PWA via P/J13. The $\overline{\text{YES/ENTER}}$, $\overline{\text{REV/CHG}}$, $\overline{\text{ONSW}}$, and $\overline{\text{OFFSW}}$ touchswitch signals are routed off the CPU/display PWA via P/J12 to the power supply connector P/J7. The $\overline{\text{YES/ENTER}}$ and $\overline{\text{REV/CHG}}$ signals input the data buffer U8 on the power supply PWA. A similar data buffer, U4, on the CPU/display PWA inputs the remaining eight touchswitch signals. U8 and U4 place data on the system data bus (D0-D7). When one of the touchswitches is pressed, a ground is applied to the corresponding touchswitch signal line that provides an active low signal at the appropriate data buffer input pin. The $\overline{\text{ONSW}}$ signal is used on the power supply PWA as an input to the ON/OFF latch consisting of U14B and U14C. The $\overline{\text{OFFSW}}$ line is routed to the test port via connector P/J9, pin 8.

The LCD screen interfaces with the CPU/display PWA via P/J15 and P/J14. AC power from the DC-to-AC converter U17 is supplied to the LCD screen via P/J15. The LCD screen also receives addresses A0 and A1 and data bits D0 through D7 via P/J14 for display control.

The primary interface between the CPU/display PWA and the power supply PWA interface is through the power supply PWA connector P/J12 on the CPU/display PWA that connects via a ribbon cable with connector P/J7 on the power supply PWA. The CPU/display PWA interface consists of address lines A1 and A2, data lines D0 through D7, +5 VDC power, +2.5 VDC reference voltage, and various signals.

4.2.1.2
MICROPROCESSOR CIRCUITRY

The microprocessor circuitry consists of the following:

- 8032 single-chip CPU (U11)
- 10-MHz crystal oscillator (Y1)
- Bus transceiver (U12)
- Transparent latch (U13)
- 8K x 8 RAM chip (U21)
- 32K x 8 EPROM chip (U22)

U11, the 8032 single-chip CPU, controls all functions of the infuser. U11 has internal RAM for the program stack and for storage of temporary variables. U11 uses a multiplexed 16-bit address bus, an 8-bit data bus, and a built-in 8-bit I/O port.

The microprocessor is clocked by Y1, a parallel-resonant 10-MHz crystal oscillator. Test points E1-E2 and E3-E4 are used to disconnect Y1 during depot level repair in order to single-step U11 for control.

All operating parameters for the infuser are stored in U21, the nonvolatile 8K x 8 RAM chip that decodes the 8032 address bits (A0 through A14) to read from or write to the system data bus (data bits D0 through D7). Read and write operations are controlled by the $\overline{\text{BRD}}$ and $\overline{\text{BWR}}$ signals derived from the $\overline{\text{CPU RD}}$ and $\overline{\text{WR}}$ signals.

U21 is mounted on a socket that contains a lithium battery, a voltage monitor chip, and a real-time clock chip. The lithium battery is used to retain the data stored in RAM during short periods of infuser power loss. The voltage monitor chip monitors the power supplied to the socket and connects the lithium battery to the real-time clock chip if the logic power supply shuts down.

U22 is a 32K x 8 EPROM that stores the infuser software program. U22 places firmware instructions on the system data bus according to the status of address lines A0 through A15 when enabled by the $\overline{PSEN}$ signal from the CPU.

The octal tri-state bus receiver, U12, and the octal D-type transparent latch, U13, provide an interface between the CPU and the system data and address busses. U12 and U13 connect to the CPU lines AD0 through AD7. U12 uses AD0 through AD7 as a data interface between the CPU and the system data bus (D0 through D7), transmitting data to and receiving data from the various components throughout the system that connect to the data bus. U13 latches in these lines and uses them with CPU lines AD8 through AD15 for the system address bus, consisting of addresses A0 through A15.

4.2.1.3
CHIP SELECT CIRCUITRY

U6 is a 3-to-8 multiplexer that decodes address bits A6 through A4 when gated by A7 and A15 to provide eight I/O chip select signals, $\overline{CS0}$ through $\overline{CS7}$. These chip select signals, the bus read command ($\overline{BRD}$), and the bus write command ($\overline{BWR}$) are used as system control signals *(see Table 4-2)*.

Table 4-2. CPU/Display PWA Control Signals

Signal	Function
$\overline{CS0}$	
$\overline{CS1}$	
$\overline{CS2}$	
$\overline{CS3}$	NANDed with $\overline{BWR}$ to gates U2 and U14
$\overline{CS4}$	NANDed with $\overline{BRD}$ to enable output of U19
$\overline{CS5}$	Routed to power supply PWA; used as chip select input (CS) to PPI U7
$\overline{CS6}$	ANDed with $\overline{BRD}$ to gate front panel switch data buffer U4
$\overline{CS7}$	
$\overline{BRD}$	CPU bus read command (a function of the $\overline{CPU\ RD}$ command)
$\overline{BWR}$	

4.2.1.4
ANALOG-TO-DIGITAL CONVERTER

The analog-to-digital converter (ADC), U19, inputs the enable signals to the LEDs. The ADC provides data outputs that represent LED display status to the microprocessor data bus by decoding addresses A0, A1, and A2. The ADC provides a digital representation of eight analog inputs (IN0 through IN7) to U11. IN0 monitors the current consumption of U3 and the LED display buffer through differential amplifier U18A. Analog inputs IN1 through IN6 monitor the outputs of U3 (cathodes of the LED displays) to check for shorted or open LEDs. IN7 monitors the +2.5 VDC precision voltage reference to compare it against the supply voltage applied to the ADC.

4.2.1.5
LCD INTERFACE

The LCD subassembly connects to the system data bus, address bits A1 through A0, and an I/O chip select. The LCD background lighting is provided by an electroluminescent panel (EL) powered by a DC-to-AC converter at U17. The converter converts the +5 VDC to approximately 90 VAC. The background lighting is turned off by disabling transistor Q2 two minutes after a touchswitch is pressed or 30 seconds after the door is locked. The viewing angle is set to provide maximum contrast by adjusting potentiometer R19. Potentiometer R19 is factory adjusted to give maximum contrast at a viewing angle perpendicular to the LCD screen. U10, a DC-to-DC converter, provides -5 VDC to allow a full 10 volt adjustment range of R19.

4.2.1.6
LED DISPLAY CIRCUIT

The LEDs are driven on a time-multiplexed basis. The pattern of segments to be illuminated is latched into U14 by U11. During the same CPU cycle, the seven-segment LED that displays the pattern is enabled by address bits written to the latch at U2 that is buffered by U3.

The anodes of the single LED that provides the decimal point and the LED array that illuminates the battery symbol are illuminated by the $\overline{DP}$ signal from the U14 latch. Information represented by the $\overline{DP}$ signal is displayed by the decimal point when it is enabled with the tenths display and by the battery LED when it is enabled with the units display.

4.2.1.7
WATCHDOG CIRCUIT

The watchdog circuit consists of the dual one shot at U15 and the two NAND gates from U16 that form a set/reset flip flop. The one shot is periodically triggered by U11 as part of its firmware program. Before the one shot times out and causes the flip flop to set the $\overline{MALF}$ line, U11 must activate RWAT, which resets the flip flop and prevents it from activating $\overline{MALF}$. The watchdog circuit assures that the firmware contains the correct code and that U11 is executing code. The watchdog circuit also assures that U11 is the correct length and that the real-time clock that sets U11 to activate RWAT, is keeping correct time and can be accessed by U11.

4.2.2
POWER SUPPLY PWA

The power supply PWA contains the following:

- Power supply circuitry that converts the low-voltage (11 to 17 VAC) from the line transformer to regulated DC
- Battery charging and monitoring circuitry that keeps the battery at full charge and provides the LOW BATT alarm
- 8255 programmable peripheral interface (PPI), U7, that contains three 8-bit I/O ports to allow U11 to control the motor, read data from and send data to the printer port, and read the state of the switches
- Set/reset flip flop (ON/OFF latch), U14B/U14C, that monitors the state of the vial and injector switches and the [ON] touchswitch to control power to the logic circuitry, and is powered by the battery when AC power is off
- Motor drivers U17A, U17B, U17C, and U17D that step the motor through its phases, and motor monitoring circuitry U15A, U15B, U15C, U15D that detects driver and motor malfunctions

4.2.2.1
POWER SUPPLY SYSTEM INTERFACES

The power supply PWA receives input from either the isolation transformer T1 or the battery via P/J3. The power supply PWA interfaces with the CPU/display PWA through a ribbon cable connected at P/J7 that consists of the microprocessor data bus lines, address lines A0 and A1, +5 VDC power, and various signal lines.

The power supply PWA receives the $\overline{\text{VIALSW}}$ signal from P/J6 and the other microswitch signals ($\overline{\text{PRESSURESW}}$, $\overline{\text{SYRINGELO}}$, $\overline{\text{SYRINGE}}$ $\overline{\text{EMPTYSW}}$,and $\overline{\text{INJECTORSW}}$) from P/J4. The motor drive signals and the shaft sensor feedback signals are routed to the power supply PWA via P/J 5.

The audible alarm signal, audible level switch inputs, door switch signal, and patient pendant input interface with the power supply PWA through a connector, P/J8. P/J8 also routes lines to the printer/Dataway connector J10.

Test port J11 interfaces with the power supply PWA via P/J9 to provide external access to test points throughout the system.

4.2.2.2
UNREGULATED DC VOLTAGE

The output of AC power transformer T1 is applied to CR14 via connector P/J3. CR14 is a full-wave rectifier; capacitor C16 filters the resulting DC voltage. When AC power is on, operational amplifier U12A, transistors Q4 and Q2, and voltage reference U18 charge the battery. Transistor Q1 gates the unregulated voltage to U9 and U10, which are +5 VDC regulators for the logic power and motor power.

Operational amplifier U3 monitors the unregulated voltage and provides $\overline{\text{DISBATT}}$ and $\overline{\text{LOBAT}}$ signals to U11. The $\overline{\text{DISBATT}}$ and $\overline{\text{LOBAT}}$ signals are derived from two voltage thresholds produced from a precision resistor network.

4.2.2.3
ON/OFF LATCH

Unregulated DC voltage is present in the power supply when either AC or battery power is available. A supply of +5 VDC is available from the unregulated DC voltage by precision voltage references U5 and U6. The voltage powers U13 and U14, which make up the ON/OFF latch. The ON/OFF latch is a set/reset flip flop set by the injector or vial switches being closed or by the [ON] touchswitch being pressed. The output of the ON/OFF latch drives the gate of Q5. Q5 drives the base of Q1 that connects the +5 VDC logic and motor regulators with the unregulated DC voltage. Gates from U13 and U14 prevent the [OFF/RECHG] touchswitch from resetting the ON/OFF latch when a malfunction is being reported via the $\overline{\text{MALF}}$ line.

4.2.2.4
PRINTER DATA LATCH

The printer data latch latches data from U11 to send out of the printer port as printer data.

4.2.2.5
MOTOR DRIVER

The gates of U17 drive transistors Q9 through Q6 from the 8255 port A outputs and are disabled by $\overline{\text{MALF}}$, preventing motor movement during a malfunction. The gates of U15 generate the $\overline{\text{MOTORBAD}}$ signal if the inputs to U17 are not of opposite polarity to the drive signals to the motor.

4.2.2.6
8255 PROGRAMMABLE PERIPHERAL INTERFACE

The 8255 programmable peripheral interface chip, U7, is an I/O peripheral that is written to and read from by U11 via the microprocessor data bus when addresses A0 and A1 are properly decoded. U7 contains three 8-bit I/O ports: port A, port B, and port C. Port A (PA0 through PA7) is used for motor control, the strobe for the printer port, and the signal that enables the LCD backlighting. Port B is used for the printer data input and parity bit I/O. Port C is a general purpose input port that monitors most critical switches and indicators.

4.2.3
BATTERY BOOST CHARGER PWA

The battery boost charger PWA is installed in infusers with the following final assembly numbers and service revision letters:

- 850-04250-005 (L and above)
- 850-04250-008 (C and above)

The final assembly number and service revision letter are located on the lower right side on the back of the infuser.

The battery boost charger PWA contains the following circuitry:

- Differential amplifier, U3
- 20 mA shut-off circuitry, Q2
- Window comparator with hysteresis, U1
- 60 minute battery charger timer, U2
- 200 mA constant current source (transistors Q7, Q8, Q9) and associated logic (transistors Q3, Q4, Q5, Q6)
- AC detector, transistor Q1

The battery boost charger PWA functions during infuser AC power and battery power operation, as described in the following sections.

4.2.3.1

AC OPERATION

Voltage detector U1, with associated capacitors and resistors, functions as a window comparator with hysteresis. When the battery is initially connected, the output of U1 is at logic high. After the battery voltage reaches 10 VDC, the output of U1 goes low, disabling transistors Q3 and Q4 and triggering the timer, U2.

The clock frequency of U2 is determined by C5 and R9; time-out is pending the biasing of the U2 program inputs A, B, C, and D. Upon time-out, the DECODE signal on output pin 13 of U2 goes high; this signal disables Q5, removes the supply to Q9, and causes battery charging to stop. The DECODE signal also locks in U2, preventing operation by placing a logic high on the SET input, pin 1, of U2.

The AC/DC detector consists of transistor Q1 and associated resistors. When the infuser operates on AC power, the collector of Q1 is at logic low, enabling timer U2 and transistor Q6. During DC operation, the +VRDC signal is at ground level and keeps Q1 off.

Current is limited to 200 mA by the quotient of the VBE of transistor Q8 divided by R17. Transistor Q7 acts as a power switch that is enabled and disabled by transistor Q9.

The IC, U3-B, acts as a differential amplifier with a gain of 20 decibels (dB). Current is sensed across resistor R62 in the battery charging circuitry of the power supply PWA. When current drops below approximately 20 mA, the output of U3-B, pin 1 (which is also the input to comparator U3-A, pin 6), is at 100 mV or below. Pin 3 of U3-A is referenced at 500 mV from the battery charger circuitry on the power supply PWA. Also, when current drops below 20 mA, U3-A switches to a logic high and turns on transistor Q2, disabling the charging circuit (Q1 and Q19) on the power supply PWA. Resistor R26 and capacitor C8 act as a noise filter to Q8.

4.2.3.2

DC OPERATION

When the infuser operates on battery power and the battery drains to approximately 8 VDC, pin 4 of the voltage detector U1 switches to logic high; this resets the timer U2, enabling transistors Q3, Q4, and Q5. Transistor Q6 remains disabled because Q1 is disabled.

4.3 MECHANICAL OVERVIEW

Mechanical elements of the infuser consist of the slide assembly, the syringe low (-008 and lower) and syringe empty alarm system, the occlusion pressure alarm system, and the vial and injector sensor alarm system.

4.3.1 SLIDE ASSEMBLY

The main components of the slide assembly are shown in *Figure 4-1* and *Figure 4-2*. The following sections describe the operation of the slide assembly.

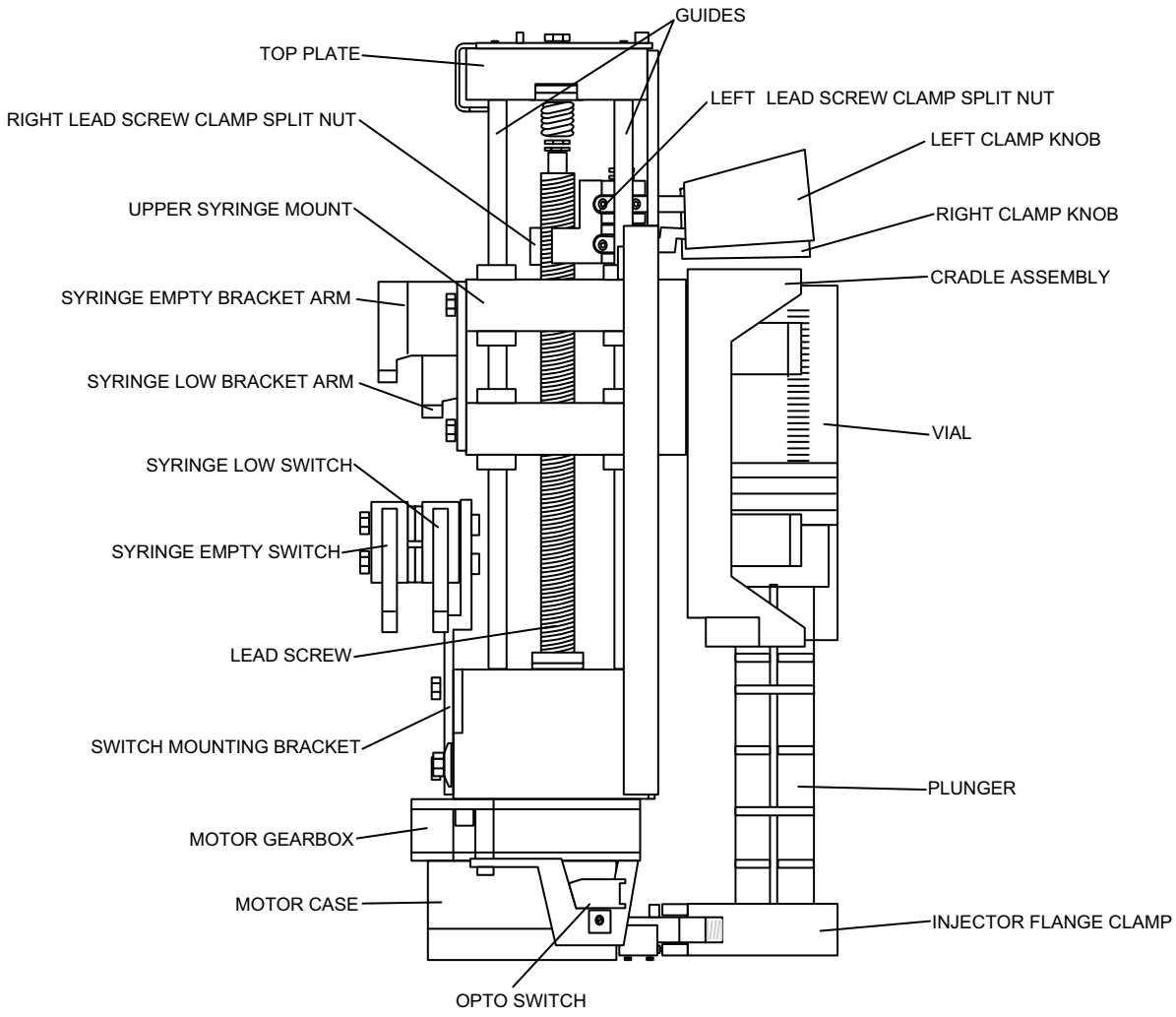

Figure 4-1. Infuser Slide Assembly (-008 and Lower)

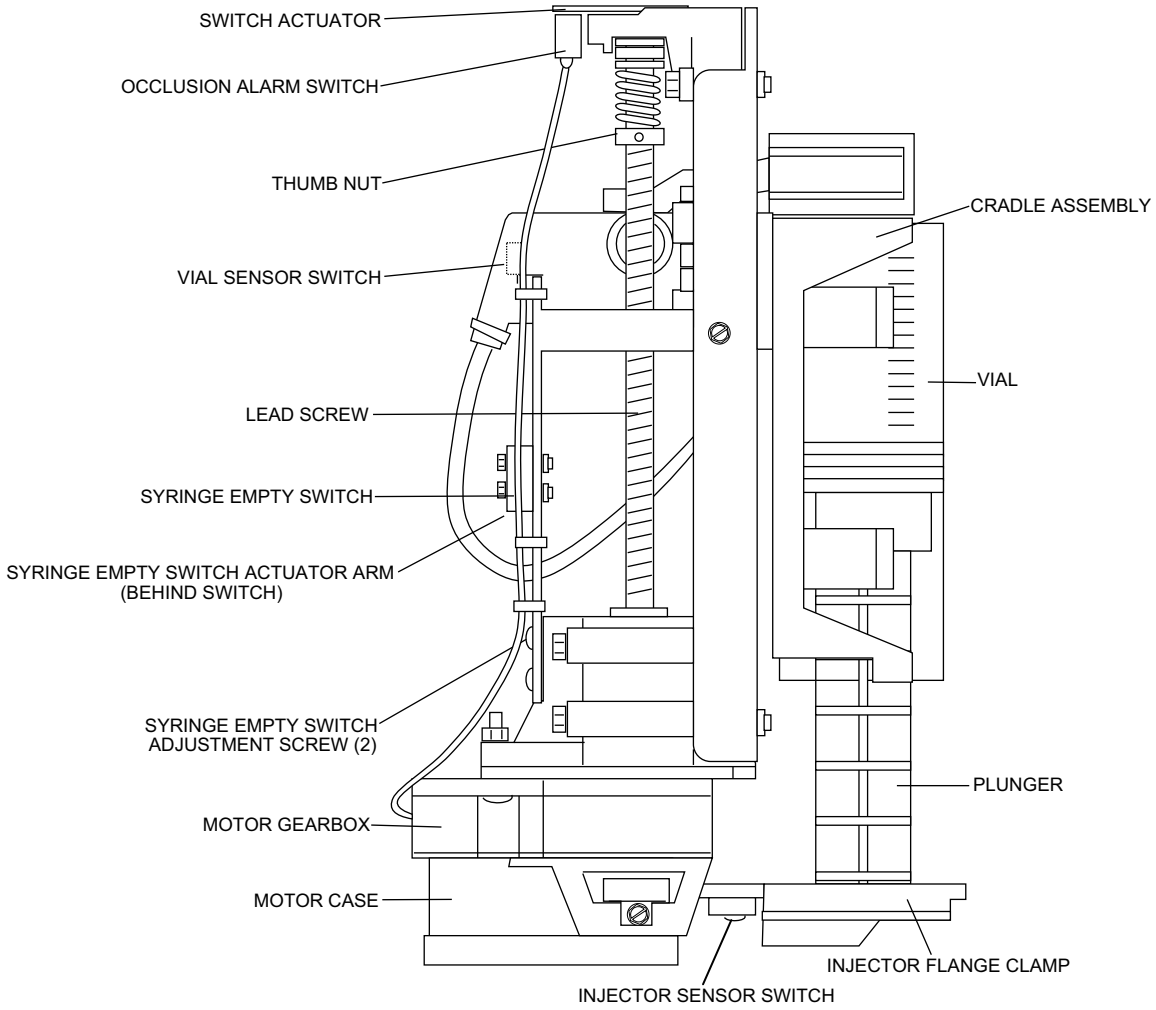

Figure 4-2. Infuser Slide Assembly (-010 and Higher)

4.3.1.1

MOTOR ASSEMBLY

The motor assembly consists of a four-phase stepper motor housed in the motor case *(see Figure 4-4)*. The motor case attaches to the gearbox. The gearbox consists of reduction gears that provide a 50-to-1 reduction in the rotation of the motor shaft. The reduction gears drive the lead screw. Fifty revolutions of the motor produce one revolution of the lead screw.

The stepper motor receives its commands (MOTO1, MOTO2, MOTO3, and MOTO4) from motor drivers on the power supply PWA. The MOTO1, MOTO2, MOTO3, and MOTO4 commands are issued by the PPI U7 under control of the microprocessor on the CPU/ display PWA.

Data buffer U4 on the CPU/display PWA inputs signals from the touchswitches on the infuser front panel. The touchswitch signals represent delivery data placed on the microprocessor data bus by U4 (D0 through D7) when U4 is gated by the ANDed product of the bus read command ($\overline{BRD}$) and chip select signal $\overline{CS6}$. Digitized delivery data is interpreted by the microprocessor according to the program in EPROM. The data provides the stepper motor commands for the delivery data set up by the touchswitches.

A reduced-diameter extension of the gear box shaft protrudes through the bottom of the gearbox; this extension is flattened to allow an opto switch mounted on a bracket on the motor case to sense rotation of the lead screw. The opto switch senses the flattened area of the extension. For each rotation of the lead screw, the opto switch generates a signal, SHAFT, that is routed to data buffer U8 on the power supply PWA.

The SHAFT signal is read by the microprocessor on the CPU/display PWA as data bit D6 when U8 is gated by the $\overline{\text{SWSTSEL}}$ signal from the CPU/display PWA. The SHAFT signal provides a feedback loop to allow the microprocessor to control the rotation of the lead screw for the delivery data set up by the touchswitches.

4.3.1.2
SLIDE MECHANISM

The slide block connects to the lead screw by a half nut. The surface of the half nut that contacts the lead screw is machined so that it engages the threads on the lead screw. When the lead screw is rotated and the half nut is engaged, the slide block moves downward towards the motor assembly. Squeezing the arm above the cradle with no syringe mounted in the cradle causes the half nut to disengage from the lead screw. The slide mechanism can then be moved up and down on the two guide shafts to the full extent of cradle travel.

4.3.1.3
CRADLE ASSEMBLY

When an inverted vial is inserted in the cradle assembly, the injector flange is held stationary in the injector flange clamp. When the slide block is driven downward by the rotation of the lead screw, the vial is forced downward and the stationary injector plunger moves further into the vial. Fluid in the vial is forced into the administration set in an amount proportional to the downward movement of the cradle and slide mechanism.

4.3.2
SYRINGE LOW AND SYRINGE EMPTY ALARM SYSTEM

✎ **Note:** Software version 3.1 and higher deactivates the syringe low switch.

A syringe status microswitch mounted to the slide assembly provides a signal to the power supply PWA when activated by the downward movement of the cradle assembly (*see Figure 4-3* and *Figure 4-4*). When activated, the syringe empty switch sends the $\overline{\text{SYRINGE EMPTYSW}}$ signal to data buffer U8 on the power supply PWA. Data buffer U8 places switch status data on the microprocessor data bus as data bits D1 and D2 for processing by the CPU/Display PWA microprocessor when the buffer is gated by $\overline{\text{SWSTSEL}}$.

On infusers with final assembly number -008 and lower, two bracket arms attach to the slide block; two syringe status microswitches mount on a bracket attached to the base of the slide assembly. The two bracket arms are oriented to the switches so that downward movement of the slide block causes the bracket arms to press against actuator arms on the switches. The inner microswitch (the syringe low switch) is closed first, by the longer, innermost arm, sending the $\overline{\text{SYRINGE LOSW}}$ signal to the power supply PWA. Further downward movement causes the shorter of the two bracket arms (the outer arm) to press the actuator arm on the outer switch (the syringe empty switch), that sends the $\overline{\text{SYRINGE EMPTYSW}}$ signal to the power supply PWA.

Note: Later configurations of -008 and lower have one bracket arm containing both actuators, allowing both the syringe low and syringe empty alarms to be adjusted with a single adjustment on the one bracket arm.

The $\overline{\text{SYRINGE LOSW}}$ signal occurs when the distance between the bottom of the syringe vial stop and the bottom of the syringe injector flange groove is 4.628 + 0.062 inches (11.57 + 0.155 centimeters), which indicates approximately 5 mL of fluid is left in the vial. The SYRINGE LOSW signal generates the syringe low alarm and the LOW SYRINGE message on the LCD.

The $\overline{\text{SYRINGE EMPTYSW}}$ signal occurs when the distance between the bottom of the syringe vial stop and the bottom of the syringe injector groove is 4.328 + 0.062 inches (10.82 + 0.155 cm), which indicates approximately 1 mL remaining in the vial. The $\overline{\text{SYRINGE EMPTYSW}}$ signal generates the syringe empty alarm and the EMPTY SYRINGE message on the LCD.

On infusers with final assembly number -010 and higher, the slide block moves down on the switch, causing the switch arm to activate the syringe empty switch.

Note: Infusers with final assembly number -010 and higher do not have a syringe low switch.

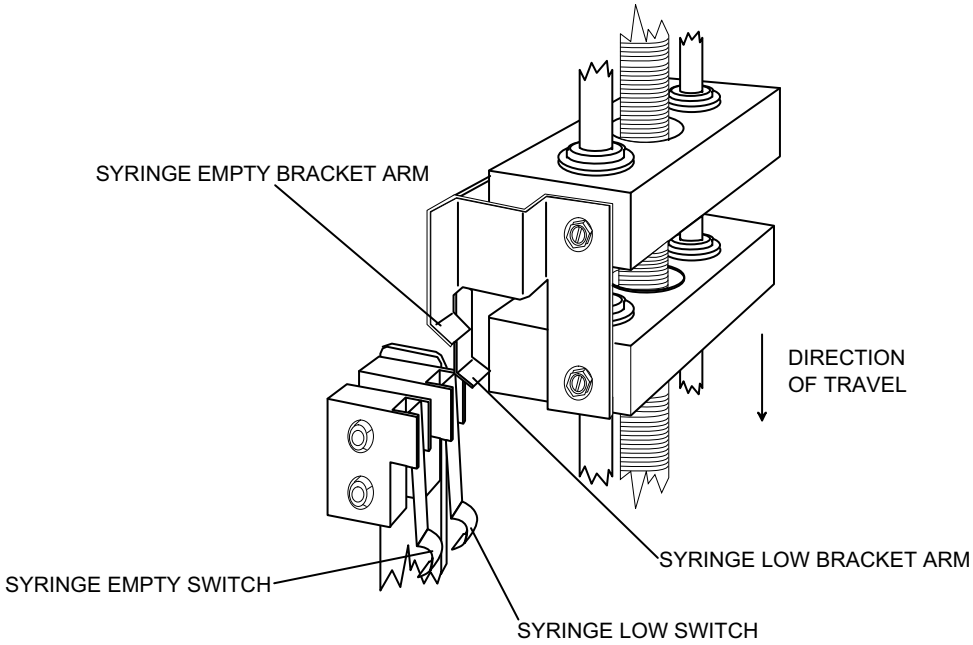

Figure 4-3. Syringe Low and Syringe Empty Alarm System (-008 and Lower)

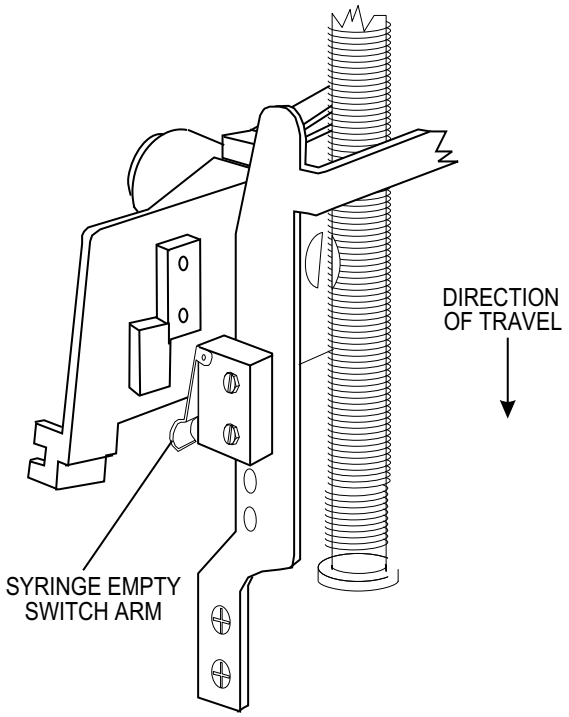

Figure 4-4. Syringe Empty Alarm System (-010 and Higher)

4.3.3
OCCLUSION PRESSURE ALARM SYSTEM

The occlusion alarm occurs when a back pressure of 15 ± 5 psig (103.5 ± 34.5 kPa) is exceeded. Back pressure is sensed by the occlusion pressure microswitch on the top plate of the slide assembly *(see Figure 4-5* and *Figure 4-6)*.

During a normal delivery cycle, rotation of the lead screw moves the slide block downward, which moves the cradle assembly downward and forces fluid out of the syringe. If there is an occlusion in the administration set, back pressure builds up in the delivery system and downward motion of the slide block is restricted.

A longitudinal slack in the lead screw exists so that when the downward movement of the slide block is restricted, rotation of the lead screw forces the slide block upwards against a compression spring between the top of the lead screw and the top plate. When a given amount of pressure is applied against the compression spring, the upper end of the lead screw presses against the switch actuator and causes it to pivot upward, thereby closing the occlusion alarm switch. On infusers with final assembly number -010 and higher, the switch opens.

When the occlusion alarm switch closes, the $\overline{\text{PRESSURESW}}$ signal goes active low. The $\overline{\text{PRESSURESW}}$ signal is applied to the input of data buffer U8 on the power supply PWA. When U8 is gated by the $\overline{\text{SWSTSEL}}$ signal, the microprocessor on the CPU/display PWA reads data bit D0 for occlusion pressure status and generates an OCCLUSION alarm. In setup mode, the OCCLUSION alarm is cleared by releasing the cradle assembly. In patient mode, the OCCLUSION alarm is cleared by opening the front door and releasing the cradle assembly. The [SILENCE] touchswitch may be pressed to mute the occlusion audible alarm for one minute.

Occlusion pressure is adjusted as described in *Section 7.2.7*.

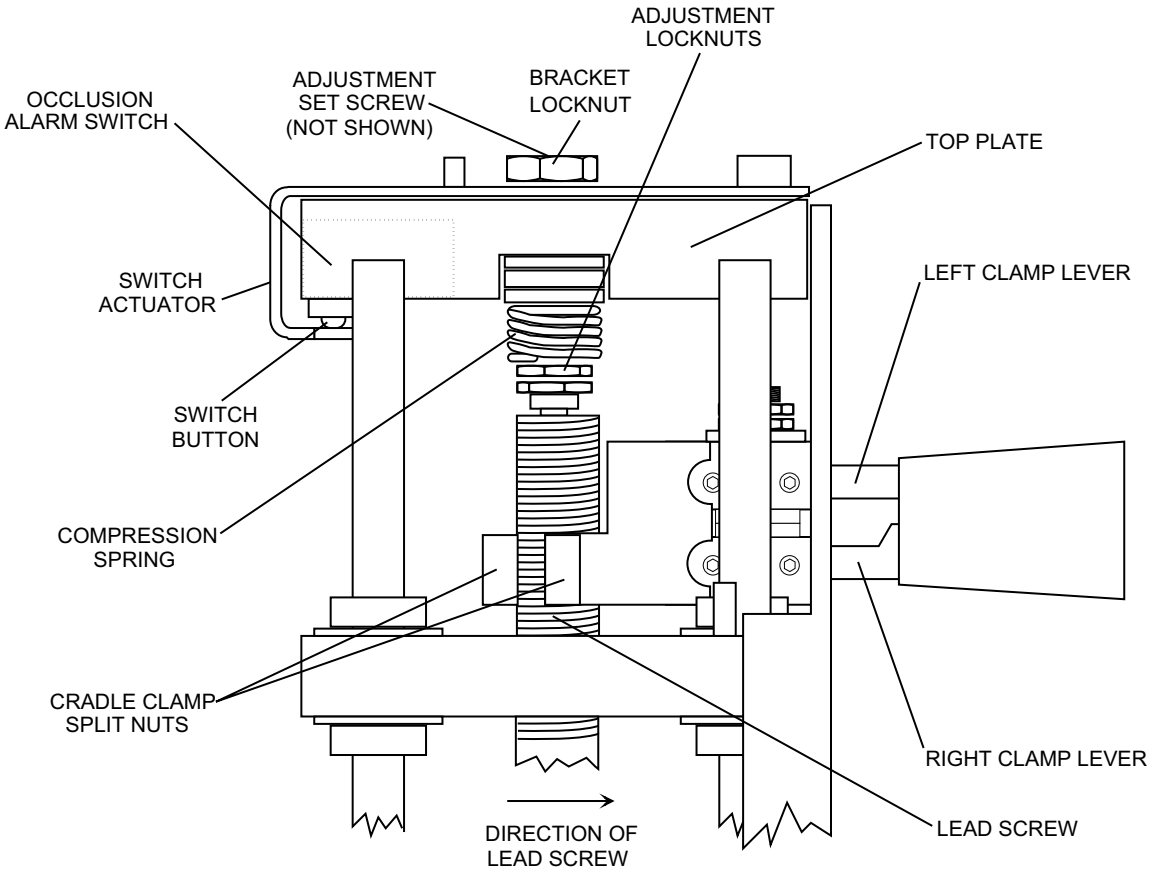

Figure 4-5. Occlusion Pressure Alarm System (-008 and Lower)

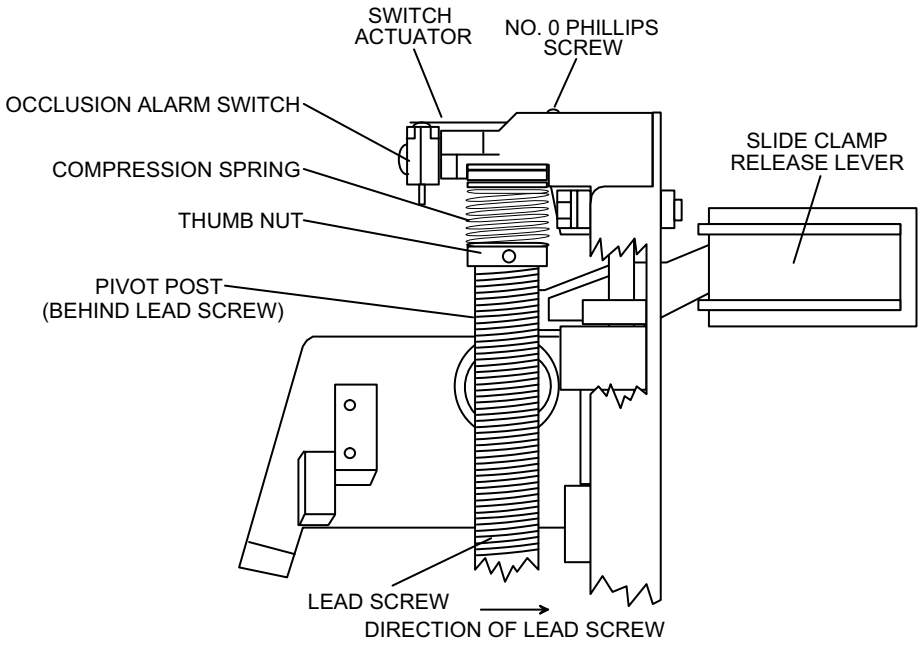

Figure 4-6. Occlusion Pressure Alarm System (-010 and Higher)

4.3.4
VIAL AND INJECTOR SENSOR ALARM SYSTEM

The vial sensor microswitch between the cradle assembly and slide block senses the presence or absence of a vial in the cradle assembly. The injector sensor switch behind the injector flange clamp senses whether or not the vial injector flange is properly seated in the injector flange clamp when a vial is clamped in the cradle assembly. When open, the vial sensor switch generates the CHECK VIAL alarm.

4.3.4.1
CHECK VIAL ALARM

When a vial is properly seated in the cradle assembly, the vial sensor rod is forced towards the rear of the infuser and presses against the vial sensor microswitch actuator arm, causing the switch to close. If the vial is improperly seated (i.e., the vial sensor rod is not forced rearward and the switch remains open) and the injector flange is properly seated, an attempt to start the infuser causes logic circuitry on the power supply PWA to sense set, the infuser is prevented from starting, the audible alarm sounds, and the CHECK VIAL message is displayed on the LCD. The [SILENCE] touchswitch has no effect on this alarm; the alarm is cleared by properly seating the vial in the cradle assembly.

4.3.4.2

CHECK INJECTOR ALARM

When a vial is mounted in the cradle assembly and the injector flange is properly seated in the injector flange clamp, the vial sensor rod is forced towards the rear of the infuser and presses against the injector sensor microswitch, which causes the switch to close. If a vial is installed in the cradle, but the injector flange is improperly seated (i.e., the vial sensor rod is not forced rearward and the switch remains open), and an attempt is made to start the infuser, logic circuitry on the power supply PWA senses the status of the $\overline{\text{INJECTORSW}}$ signal and sets the ON/OFF latch (U14B, U14C). When the ON/OFF latch is set, the infuser is prevented from starting, the audible alarm sounds, and the CHECK INJECTOR message is displayed on the LCD. The [SILENCE] touchswitch has no effect on this alarm; the alarm is cleared by properly seating the injector flange in the injector flange clamp.

4.3.4.3

CHECK SYRINGE ALARM

When no syringe is installed in the infuser, or when a syringe is installed, but both the vial and the injector flange are improperly seated, the vial sensor switch and the injector sensor microswitch remain open. If an attempt is made to start the infuser under these conditions, logic circuitry on the power supply PWA senses the status of the $\overline{\text{INJECTORSW}}$ signal and sets the ON/OFF latch (U14B, U14C). When the ON/OFF latch is set, the infuser is prevented from starting, the audible alarm sounds, and the CHECK SYRINGE message is displayed on the LCD. The [SILENCE] touchswitch has no effect on this alarm. The alarm is cleared by installing a syringe so that the vial is properly seated in the cradle assembly and the injector flange is properly seated in the injector flange clamp.

This page intentionally left blank.

Section 5

MAINTENANCE AND SERVICE TESTS

A complete maintenance program promotes infusion system longevity and trouble-free operation. Such a program should include routine maintenance, periodic maintenance inspection, and the Performance Verification Test.

5.1 ROUTINE MAINTENANCE

Routine maintenance consists of basic inspection and cleaning procedures. As a minimum requirement, inspect and clean the infuser after each use. In addition, establish a regular cleaning schedule for the device.

5.1.1 CLEANING AND SANITIZING

Practice the cleaning and sanitizing guidelines in this section. Follow hospital protocol for establishing the infuser cleaning schedule.

Before cleaning, turn off the infuser and disconnect from AC power.

Clean the exposed surfaces of the infuser with a soft, lint-free cloth moistened with one of the cleaning solutions recommended in *Table 5-1*, or with a mild solution of soapy water. Remove soap residue with clear water.

WARNING: DISCONNECT THE INFUSER FROM AC POWER PRIOR TO CLEANING THE DEVICE. FAILURE TO COMPLY WITH THIS WARNING COULD RESULT IN ELECTRICAL SHOCK.

CAUTION: To avoid mechanical or electronic damage, do not immerse the infuser in fluids or cleaning solutions. Do not spray cleaning solutions toward any openings in the device or directly on the device.

CAUTION: Use only recommended cleaning solutions and follow manufacturers' recommendations. Using cleaning solutions not recommended by Hospira may result in product damage. Do not use compounds containing combinations of isopropyl alcohol and dimethyl benzyl ammonium chloride.

CAUTION: Never use sharp objects such as fingernails, paper clips, or needles, to clean any part of the infuser. Use only soft cloths or sponges. Do not use abrasive cleaners. Do not sterilize by heat, steam, ethylene oxide (ETO), or radiation.

Note: Disinfecting properties of cleaning solutions vary, and not all cleaning solutions are sanitizers. Check product labeling or consult the manufacturer for specific information.

Table 5-1. Cleaning Solutions

Cleaning Solution	Manufacturer	Preparation
Formula C™	JohnsonDiversey	Per manufacturer's recommendation
Vesphene® IIse	Steris	Per manufacturer's recommendation
Household Bleach	Various	Use per hospital procedures Do not exceed one part bleach in ten parts water

Note: At the time of printing, Hospira recommends only the cleaning solutions in *Table 5-1*. For updated listings of approved cleaners, visit **www.hospiraparts.com**.

5.2 PERFORMANCE VERIFICATION TEST

The Performance Verification Test (PVT) consists of the tests described in the following sections. The PVT is designed to assure the infusion system is operating properly, and can also be used for diagnostic purposes during troubleshooting. The PVT should be used for performance verification before an infuser is returned to service after repair.

Note: Perform the PVT exactly as described in this manual to assure effective and reliable product evaluation information.

If any malfunction is detected as a result of the PVT, see *Section 6*.

5.2.1
EQUIPMENT REQUIRED

The PVT requires the following equipment and materials, or equivalents:

- Door key
- PCA vial; standard; List Number 6021-03
- PCA set; List Number 3559-01
- Graduate or marked test tube; readable to 0.2 mL increments or smaller
- Three-way stopcock; List Number 3233
- Digital Pressure Meter (DPM); 0 to 50 psi (Fluke® Biomedical DPM3)
- Safety Analyzer (Fluke® Biomedical 232D)
- 21-gauge butterfly needle; latex-free; List No. 4492-01; or 18-gauge blunt cannula
- Test cable; fitted with phone jack with individual banana plugs; compatible with patient control connector on rear of infuser; P/N 561-88416-001
- Parallel network; P/N 561-88419-001
- Digital Multimeter (DMM) (Fluke® 187)
- X-acto® knife

5.2.2
INSPECTION

Inspect the infusion system periodically for signs of defects such as worn accessories, broken connections, or damaged cables. In addition, inspect the infusion system after repair or during cleaning. Replace any damaged or defective external parts.

Inspect the following areas for missing or damaged parts and for cosmetic defects:

- Labels
- AC power cord
- Velcro straps
- Touchswitches
- LCD
- LEDs
- External screws
- Case
- Pole clamp and pads
- Front panel
- Security door
- Accessories

5.2.3
TEST SETUP

WARNING: A PATIENT SHOULD NEVER BE CONNECTED TO THE INFUSER DURING DEVICE TESTING.

To set up the infuser for the PVT, proceed as follows:

1. Using the dual-lock mechanism, secure the infuser to an IV pole.

   Note: When the security door is locked, the infuser locks to the pole clamp and prevents its removal without a key.

2. Connect the system to AC power unless otherwise specified.
3. Connect the appropriate Hospira PCA set to a Hospira 30 mL PCA vial/injector.
4. Prime the vial and administration set. Hold the vial vertically with the administration set extending from the top. Slowly push down on the injector until all air is cleared from the vial and administration set.

   CAUTION: Confirm all caps on the vial and the administration set are removed and all clamps are open when priming the syringe.

5.2.4
SERVICE TEST MODE TESTS

Table 5-2 and *Table 5-3* provide a list of tests and options available in the service test mode. Each test displays prompting information on the LCD screen to serve as a guide through the test.

Note: The patient pendant must be connected to the infuser to complete the service test mode test.

To enter the service test mode, proceed as follows:

1. Confirm the AC power symbol on the front panel is lit.
2. Turn off the infuser and enter the storage mode by opening the security door and pressing the **[OFF/RECHG]** touchswitch for approximately six seconds. The LCD screen should darken.
3. Press and hold **[YES/ENTER]** and **[ON]** simultaneously for approximately three seconds.
4. The LCD screen displays **INT RAM TEST** until ****SERVICE TEST**** appears. The LCD screen also displays the current software version and the total elapsed days since the infuser was placed in service.

   Note: Tests are self-prompting, giving the option of repeating the test or going to the next test.

Table 5-2. Service Tests

Test	Description
Software Version	Displays the software version to identify the revision level of the infuser program stored in EPROM
Elapsed Days	Displays total days the infuser has been in operation
Internal RAM	Microcomputer RAM is tested to assure data can be reliably written to and read from specific memory cells
External RAM ADRS	Test is performed to determine the integrity of the address lines used to select specific memory locations for data access
External RAM Cell	Microcomputer RAM memory is tested
CPU	Test routine is performed and test results are verified to assure the microcomputer is executing instructions properly
ROM	Checksum is calculated and compared to a pre-stored and pre-calculated value to assure the operating program residing in EPROM is intact
Real-Time Clock	Real-time clock is tested to verify its accuracy
LED	Pattern of 1s through 9s is displayed by the LEDs to verify operation
LCD	Non-displaying test pattern is written to the LCD RAM and compared with a stored pattern to assure that the LCD screen can accurately display data
Keypad	Stuck key test determines if any keys are permanently shorted Press individual keys to determine if the key operates and the microcomputer recognizes the correct key Test patient pendant pushbutton
Indicator	Test verifies battery and AC symbols are turned on and off when the power cord is connected and disconnected
Alarm	Audible alarm signal is generated to verify the alarm circuitry
Motor Rotation	Motor is rotated a given amount and the shaft sensor signal is checked by the motor control circuitry
Security Door	Test verifies the microcomputer recognizes when the security door is locked or unlocked
Syringe Test	Test verifies the microcomputer can detect the presence and proper positioning of the vial and injector in the syringe driver mechanism
Empty Syringe	Test verifies the microcomputer detects an empty syringe
Low Syringe	Test verifies the microcomputer detects a low syringe (PCA Plus only)

Table 5-3. Service Options	
Option	**Description**
Patient pendant tone selection	Selection provides one of the following options: - Tone with successful PCA dose only (default) - Tone on all attempted PCA doses (placebo)
12 hour clock selection (PCA Plus only) **12/24 hour clock selection (PCA Plus II Series)**	Selection provides one of the following options: - Clock format: 12 hour - Clock format: 24 hour
Select RX concentration (3.1 software and higher)	Selection provides one of the following options: - Milligrams only - Milligrams and micrograms - Drugs, milligrams, and micrograms

5.2.5 DELIVERY ACCURACY TEST

To perform the delivery accuracy test, proceed as follows:

1. Using a PCA vial/syringe with a primed PCA administration set and a 21-gauge butterfly, insert the vial into the infuser vial holder and injector cradle.
2. Purge the infuser at start up, then set up the infuser for 1 mg/mL. Place the butterfly in the graduate. Initiate two loading doses of 10 mL each.
3. Verify the infuser delivers 20 ± 1 mL in the graduate.

5.2.6 OCCLUSION TEST

Note: A light coating of medical fluid (P/N 743-35070-001) may be applied to the vial plunger to reduce friction, as needed.

To perform the occlusion test, proceed as follows:

1. Insert the water-filled vial with the primed PCA administration set into the cradle assembly. Lubricate the vial with silicone oil before each use.
2. Attach the DPM to the distal end of the administration set through the three-way stopcock.
3. Allow the infuser self test to complete. When the LCD screen displays **PURGE THE SYSTEM NOW?**, press **[SILENCE/NO]**.
4. When the LCD screen displays **DRUG: Rx MORPHINE 1 MG/ML? YES OR NO**, press **[YES/ENTER]**.
5. When the LCD screen displays **ADMINISTER LOADING DOSE NOW?**, press **[YES/ENTER]**.
6. Select loading dose of 5 mg. Press **[YES/ENTER]**, then press **[LOADING DOSE]**.
7. Observe fluid discharge at the end of the stopcock, then close the stopcock.

8. Verify the infuser sounds an alarm and flashes the **OCCLUSION** message when the pressure gauge indicates the following:

   12.5 - 17.5 psi (86.25 - 120.75 kPa)

9. Open the stopcock to clear the **OCCLUSION** alarm.

10. Press **[HISTORY]** and verify the correct time. If the time is incorrect, see the *System Operating Manual* for information on resetting the time.

11. Clear all dose history data from memory by holding down **[OFF/RECHG]** until the LCD screen, including the backlighted grid, goes blank.

5.2.7
PCA + CONTINUOUS TEST

To perform the PCA + CONTINUOUS test, proceed as follows:

1. Remove the vial from the cradle assembly and set up a standard water-filled vial with a 21-gauge butterfly on the distal end of the set.

   CAUTION: Do not remove the protective cover from the butterfly needle.

2. Insert the vial into the cradle assembly.

3. When the LCD screen displays **PURGE THE SYSTEM NOW?**, press **[SILENCE/NO]**.

4. When the LCD screen displays **DRUG: Rx MORPHINE 1 MG/ML? YES OR NO**, press **[YES/ENTER]**.

5. When the LCD screen displays **ADMINISTER LOADING DOSE NOW?**, press **[YES/ENTER]**.

6. Select loading dose of 1 mg. Press **[YES/ENTER]**, then press **[LOADING DOSE]**.

7. When the LCD screen displays **SELECT MODE PCA ONLY?**, press **[SILENCE/NO]**.

8. When the LCD screen displays **SELECT MODE CONTINUOUS?**, press **[SILENCE/NO]**.

9. When the LCD screen displays **SELECT MODE PCA + CONTINUOUS?**, press **[YES/ENTER]**.

10. Set a PCA dose of 1 mg, then press **[YES/ENTER]**.

11. Select a lockout interval of five minutes, then press **[YES/ENTER]**.

12. Select a continuous rate of 20 mg/hr, then press **[YES/ENTER]**.

13. When the LCD screen displays **4 HOUR DOSE LIMIT SET?**, press **[YES/ENTER]**.

14. Select a **4 HOUR DOSE LIMIT** of 1.5 mg, then press **[YES/ENTER]**.

15. Press **[HISTORY]** to confirm the infuser settings are as specified.

16. Close and lock the security door. The display should read **DOOR LOCKED-TOTAL DELIVERED 1 mg**.

17. Press **[RESET/START]**. Verify the walking bar appears in the LED window, indicating **CONTINUOUS** mode delivery. Verify that three asterisks appear in the upper left corner. The asterisks indicate PCA dosing is available.

18. Press the patient pendant pushbutton to deliver a PCA dose. Verify a beep sounds and **PCA + CONTINUOUS** displays. Verify the walking bar appears in the LED window.

19. After approximately two minutes, verify the four hour dose limit has been reached and the KVO rate has begun. Verify the **TOTAL DELIVERED** displays 2.5 mg.

    ✎ **Note:** If delivered prior to setup, the loading dose is not included in the four hour dose limit.

20. Press the patient pendant pushbutton three times; the infuser should not respond.

21. Unlock the security door and remove the injector from the holder. Verify the **CHECK INJECTOR** message flashes. Reseat the injector and verify the **CHECK INJECTOR** message disappears.

22. With the security door unlocked, pull the top of the vial away from the vial holder, and verify the **CHECK VIAL** message flashes. Reinsert the vial and verify the **CHECK VIAL** message disappears.

23. Remove the vial from the cradle. Clear all dose history data from memory by holding down **[OFF/RECHG]** touchswitch until the LCD screen, including the backlighted grid, goes blank.

5.2.8
PATIENT CONTROL JACK TEST

To perform the patient control jack test, proceed as follows:

1. Disconnect the patient pendant cable from the patient control jack on the back of the infuser.

2. Connect the test cable phone jack to the patient control connector. Connect the leads on the other end of the cable to the terminals of the DMM as appropriate. Set the DMM to 10 volt DC scale.

3. Turn on the infuser and verify a DMM reading of greater than or equal to 4.5 VDC. Remove the test cable from the infuser.

5.2.9
PATIENT PENDANT ASSEMBLY TEST

To perform the patient pendant assembly test, proceed as follows:

1. Disconnect the patient pendant from the patient control jack on the back of the infuser.

2. Unscrew the shield from the patient pendant phono plug.

3. Set the DMM to measure continuity, then attach a DMM test lead to each patient pendant phone plug connection. Polarity is not critical.

4. Press and hold the patient pendant switch. Verify the DMM displays continuity (0 Ω) and the continuity beeper sounds.

   ✎ **Note:** A value of up to 3 Ω may be indicated due to patient pendant cable assembly internal resistance.

5. Press and hold the patient pendant switch. Grasp the patient pendant cable approximately four inches (10 cm) above the patient pendant switch and rotate the cable three to four times while bending it approximately 30 degrees. Verify the DMM continues to display continuity.

6. Press and hold the patient pendant switch. Grasp the patient pendant cable approximately four inches (10 cm) above the phone plug and rotate the cable three to four times while bending it approximately 30 degrees. Verify the DMM continues to display continuity.
7. Release the patient pendant switch. Verify the DMM displays infinity (maximum resistance).
8. Connect the patient pendant cable to the patient control jack. Secure the locking nut, if applicable.

5.2.10
BATTERY CHARGER TEST

To perform the battery charger test, proceed as follows:

1. Disconnect the infuser from AC power.
2. Remove the battery cover and disconnect the battery.
3. Connect the parallel network to the charging circuit connector.
4. Connect the infuser to AC power, and turn on the infuser. Measure voltage across the network. The DMM should read 9.4 ± 0.15 VDC (14.5 ± 2 VDC with a battery boost charger PWA).

   Note: See *Section 4.2.3* to identify infuser configurations with a battery boost charger PWA.

5. Remove the parallel network. Reconnect and re-install the battery. Confirm the battery wires are not pinched.
6. Re-install the battery cover.

5.2.11
ELECTRICAL SAFETY TEST

Note: The electrical safety test must be performed in accordance with the instructions contained in the safety analyzer user's guide.

To perform the electrical safety test, see *Table 5-4*, and proceed as follows:

1. Connect the infusion system AC (mains) power cord to a safety analyzer.
2. Check the leakage current with the safety analyzer. Leakage current must not exceed specifications in *Table 5-4*.
3. Measure the resistance of the AC (mains) connector ground lug with the safety analyzer. Resistance should not exceed specifications in *Table 5-4*.
4. Connect the device to AC power and confirm the AC indicator is lit.

Table 5-4. Electrical Safety Measurements	
Measurement	**Not to Exceed**
Enclosure leakage current normal condition (ground intact)	300 µA
Enclosure leakage current (open)	500 µA
Earth leakage current (ground intact)	500 µA
Earth leakage current (open ground)	1000 µA
Chassis ground resistance	0.1 Ω

5.2.12
PRINTER TEST

To perform the printer test, proceed as follows:

1. Connect the infuser to AC power.
2. Connect the printer cable to the printer port located on the back of the infuser.
3. Power on the printer and verify it is on line.
4. Open the infuser security door, then insert the syringe into the cradle assembly. Verify the infuser begins the self test.
5. After the self test completes, the **PURGE SYSTEM NOW?** prompt displays, then press **[PRINT]**.
6. Confirm **END OF RECORD** is printed on the history and event log printout. It may be necessary to take the printer off line, then form feed the last partial page of the printout from the printer.
7. Compare the printout to *Figure 5-1*. Date, time, and parameters will vary. Depending on the infuser configuration or the software revision level, the printout may not have an **HOUR-BY-HOUR:** entry.

```
***************************
*        LIFECARE 4100    *
        PATIENT RECORD
*                         *
***************************
    PATIENT NAME:
_________________________

    PATIENT ID:
_________________________

    DRUG ADMINISTERED:
_________________________
  10:41 NOV 17 04

  MODE NOT SET

            SETTINGS:

  CONC NOT SET

            DELIVERED:
 LOADING              0.0 MG
 TOTAL                0.0 MG
          LAST 1 HOUR

 PCA DEMANDS              0
 PCA INJECTED             0
 PCA PARTIAL              0

 LOADING              0.0 MG
 DOSE DEL             0.0 MG
 TOTAL                0.0 MG

        LAST 24 HOURS

 PCA DEMANDS              0
 PCA INJECTED             0
 PCA PARTIAL              0

 LOADING              0.0 MG
 DOSE DEL             0.0 MG
 TOTAL                0.0 MG

      HOUR-BY-HOUR:

      EVENT LOG:
 10:41 PRINTOUT
 10:41 ON

***************************
 VERIFIED BY:
***************************

***************************
*      END OF RECORD      *
***************************
```

Figure 5-1. Sample Printer Test

5.2.13
END OF THE PVT

At the end of the PVT, clear all dose history data from memory by pressing **[OFF/RECHG]** until the display goes blank. If all tests have been successful, return the infuser to service. If any of the tests fail, see *Section 6*, or contact Hospira.

5.3
PERIODIC MAINTENANCE INSPECTION

Periodic maintenance inspections should be performed per hospital procedures for compliance to accreditation requirements. It is recommended that JCAHO and/or hospital protocol be followed for establishing a periodic maintenance inspection schedule. Product specifications for this inspection are listed in *Section 8*.

To perform the periodic maintenance inspection, complete the PVT in *Section 5.2*.

5.4
BATTERY OPERATION OVERVIEW

The infusion system is intended to operate on battery power on an exception basis only, such as emergency backup or temporary portable operation. Examples of emergency backup include AC power failure or inadvertent disconnection of the AC power cord. An instance of temporary portable operation includes patient transfer from one location to another.

The device should be connected to AC power whenever possible to allow the battery to remain fully charged. The battery indicator illuminates when the infuser is operating on battery power.

Factors that most commonly affect battery life are the depth and frequency of discharge and the length of the recharge period. As a general rule, the more often the battery is discharged and recharged, the sooner it will need replacement.

The primary cause of damage is leaving the battery in a less than fully charged state for any period of time. Battery damage can occur in a matter of hours and cause a permanent loss of battery capacity. The amount of lost capacity depends on the degree of discharge, the storage temperature, and the length of time the battery was stored in a discharged state.

Note: A permanently damaged battery cannot be recharged to full capacity.

When the battery discharges below an acceptable level while the infuser is operating, an alarm sounds and the **LOW BATTERY** message displays. Although it is not recommended to continue operating the infuser on battery power at this point, the battery continues providing power until it is depleted. When the battery is depleted, the infuser enters the battery discharged mode and operation ceases.

CAUTION: As soon as the low battery alarm occurs, connect the infuser to AC power.

Recharging can occur any time the infuser is connected to AC power. It is recommended that the infuser be connected to AC power whenever practical to maximize available battery charge during patient transport or ambulation. The power switch does not have to be on for the battery to recharge. Recharging while the infuser is operating is rate dependent.

Section 6

TROUBLESHOOTING

This section contains information on technical assistance, diagnostic mode, alarm and display messages, and troubleshooting procedures.

6.1 TECHNICAL ASSISTANCE

For technical assistance, product return authorization, and to order parts, accessories, or manuals within the United States, contact Hospira.

1-800-241-4002

For additional technical assistance, technical training, and product information, visit the website at **www.hospira.com.**

For technical assistance, product return authorization, and to order parts, accessories, or manuals from outside the United States, contact the nearest Hospira sales office.

6.2 DIAGNOSTIC MODE

A printer must be connected to the infuser when using the diagnostic mode.

The PCA Plus II infuser with 3.1 software and above has a diagnostic mode that allows retrieval of the last 200 events and malfunction codes. This information is retained indefinitely in a battery-backed RAM on the CPU/display PWA.

The diagnostic mode event log lists the last 200 events. The malfunction log lists the last 200 malfunction codes *(see Figure 6-1)*.

To access diagnostic information, confirm the infuser is in storage mode (cold-start condition) *(see Section 4.2.1.2)*, then proceed as follows:

1. Simultaneously press and hold the **[PURGE SYSTEM]** and **[ON]** touchswitches for approximately three seconds. The LCD screen first displays **INT RAM TEST**, then **DIAGNOSTIC MODE**. The LCD screen also displays the software revision and the total elapsed days since the infuser was placed into service.
2. Press **[YES/ENTER]**.
3. Press **[PRINT]** to print out the event log, or press **[SILENCE/NO]** to continue to the malfunction log screen.

```
********************
**DIAGNOSTIC MODE **
********************
S.W. VERSION:  X.XX
 ELAPSE DAYS:     Ø
PM 12:Ø1 NOV 12 09
   ***************
     EVENT LOG
   ***************
AM Ø8:28 OFF
AM Ø9:19 4 HR LIMIT NOT SELECTED
AM Ø9:19 LOCKOUT       5  MIN
AM Ø9:19 PCA DOSE      5.Ø MG
NOV Ø7 09 NEW DATE *
PM 12:16 OFF
PM 12:15 CHK SYR ALM
PM 12:15 INJECTR ALM
PM 12:14 CHK SYR ALM
PM 12:14 VIAL ALM
********************
VERIFIED BY:
********************

********************
*  END OF RECORD   *
********************
```

```
********************
**DIAGNOSTIC MODE **
********************
S.W. VERSION:  X.XX
 ELAPSE DAYS:     Ø
PM 12:Ø6 NOV 12 09
   ***************
   MALFUNCTION LOG
   ***************
/ML ØØ ØØ  MALF.   1A
/ML Ø9 14  MALF.   2B
/ML Ø9 1Ø  MALF.   3A
/ML Ø9 Ø9  MALF.   4F
********************
VERIFIED BY:
********************

********************
*  END OF RECORD   *
********************
```

Figure 6-1. Sample Event Log and Malfunction Log

6.3
ALARM AND DISPLAY MESSAGE OVERVIEW

Under most alarm conditions, the infuser stops operating, generates an audible alarm, and displays an alarm message on the LCD screen.

CAUTION: For those patients who are likely to be adversely affected by unintended operations and failures, including interrupted medication or fluid delivery from the device, close supervision and provision for immediate corrective action should be provided.

CAUTION: Do not return the infuser to service after an alarm or malfunction without determining and correcting the cause of the alarm or malfunction.

6.3.1
AUDIBLE ALARMS

The infuser sounds an alarm in the event of any abnormal condition. The alarm volume can be set to low, medium, or high by a three-way switch on the back of the infuser.

The infuser produces five different tones, as follows:

- A single, short tone indicates the infuser senses a touchswitch being pressed.
- Two short tones indicate the start of a power-up sequence.
- Three short tones indicate that a touchswitch was pressed that is invalid for the infuser's current state of operation or is not an allowable response to a prompt on the LCD screen.
- Two short-tone, long-tone sequences, repeating every few seconds, indicate an alarm condition. The LCD screen displays the type of alarm in flashing letters.
- A continuous tone indicates an infuser malfunction. The LCD screen may or may not display further information, depending on the malfunction.

6.3.2
ALARM CAUSES AND ACTIONS

The infuser will stop delivery when any of the following alarms occur:

- **CHECK VIAL**
- **CHECK INJECTOR**
- **CHECK SYRINGE**
- **EMPTY SYRINGE**
- **OCCLUSION**
- **MALFUNCTION**

These alarms, their possible causes, and corrective actions are detailed in *Table 6-2*.

6.3.3
MALFUNCTION CODES

Table 6-1 describes the malfunction codes as they appear when an alarm sounds and **MALFUNCTION** appears on the LCD screen.

Table 6-1. Malfunction Codes

Code	Malfunction	Corrective Action
1A	MALF line went low and could not return to normal	Replace CPU/display PWA
1B	MALF line went low and could not return to normal	Replace CPU/display PWA
1C	MALF line did not go low soon enough after power-up	Replace CPU/display PWA
1D	Malfunction line went high too soon	Replace CPU/display PWA
1E	Watchdog circuit failure during real-time operation	Replace CPU/display PWA
2A	Power-up diagnostic failed	Replace CPU/display PWA

Table 6-1. Malfunction Codes		
Code	**Malfunction**	**Corrective Action**
2B	Nonvolatile RAM checksum test failed	Replace CPU/display PWA
3A	Motor failed to rotate	Lubricate lead screw Replace power supply PWA Replace motor assembly
3B	MOTOR BAD signal from motor driver circuitry	Replace power supply PWA Replace motor assembly
4A	LCD timeout error	Replace CPU/display PWA
4B	LCD data readback error	Replace CPU/display PWA
4C	Nonvolatile RAM test failed	Replace CPU/display PWA
4D	EPROM checksum test failed	Replace CPU/display PWA
4E	Not used	
4F	LED segment defective	Replace CPU/display PWA
4G	Real-time clock stopped	Replace CPU/display PWA
4H	Touchswitch stuck on front panel	Replace front panel Replace CPU/display PWA
4I	Not used	
4J	Not used	
4K	LED error	Replace CPU/display PWA
4L	Voltage error	Replace power supply PWA
4M	Not used	
4N	Error in timer T1	Replace CPU/display PWA
4O	Error in timer T2	Replace CPU/display PWA
4P	Program error	Replace CPU/display PWA
4Q	CPU stack error	Replace CPU/display PWA
4R	Analog-to-digital converter error	Replace CPU/display PWA
5A	Undetermined error	Contact Hospira

6.3.4
ALARM MESSAGES/FAULT SYMPTOMS

Table 6-2 lists alarm message/fault symptoms that require technical service.

Before troubleshooting, turn off the infuser, then on, and allow the self test to complete.

If an alarm or malfunction persists, carefully inspect the infuser for damage as described in *Section 5.1.1*. If the alarm or malfunction persists, perform the corrective action specified in *Table 6-2*, or contact Hospira.

Table 6-2. Alarm Messages/Fault Symptoms

Alarm Message/ Fault Symptom	Possible Cause	Corrective Action
CHECK VIAL	Vial is improperly installed or missing	Properly insert the vial in the vial cradle Adjust the vial sensor switch
CHECK INJECTOR	Injector is improperly installed or missing	Properly insert the injector in the driver/retainer assembly Adjust the injector sensor switch
CHECK SYRINGE	Syringe (vial and injector) improperly installed or missing	Properly insert the syringe in the cradle Replace the injector sensor switch Replace the vial sensor switch
LOW SYRINGE (PCA Plus only)	Approximately 5 mL of solution remaining in syringe Message occurs too soon or too late	Note the alarm and press **[SILENCE/NO]** to silence the alarm Adjust the syringe low switch
EMPTY SYRINGE	Syringe empty (approximately 1 mL may remain) Alarm occurs too soon or too late	Press **[SILENCE/NO]** to silence the alarm. Unlock and open the security door, remove the empty syringe, and turn off the infuser. Prepare and insert the vial/injector, then complete the setup. Adjust the syringe empty switch
CHECK SETTINGS	Security door closed and locked before setup was complete	Open the security door and verify settings are properly entered
CHECK 4-HR LIMIT	Four-hour dose limit is set less than PCA dose	Confirm PCA dose is less than or equal to four-hour dose limit
DOOR OPEN	Security door has been left open for more than two minutes without a touchswitch being pressed Infuser does not sense door closure	Close and lock the security door after all parameters are entered Adjust the door latch mechanism Replace the door lock switch
OCCLUSION	Kinked or otherwise occluded tubing, occluded venipuncture device, or closed slide clamp Occlusion pressure out of calibration	Open the security door Relieve back pressure by squeezing and releasing the cradle release handles Adjust occlusion pressure Replace the occlusion pressure switch

Table 6-2. Alarm Messages/Fault Symptoms

Alarm Message/ Fault Symptom	Possible Cause	Corrective Action
INFUSER IN RESET Message also appears after an alarm condition has been cleared	**[RESET/START]** touchswitch pressed when the security door is locked in CONTINUOUS or PCA+ CONTINUOUS mode, and delivery is in progress	Press **[RESET/START]** to resume delivery
LOW BATTERY (flashing battery symbol)	Battery is near discharge level	Connect the infuser to AC power
No battery operation or short operating time to LOW BATTERY alarm	Battery not fully charged Battery is defective or has exceeded useful life	Recharge battery for 16 hours Test the battery charger circuit. If the test passes, replace the battery. If the test fails, replace the power supply PWA. Replace the battery
No AC or battery operation	Blown fuse Defective power supply PWA	Replace the fuse Measure AC voltage between J3 pins 2 and 3. If voltage is between 11 and 17 VAC, replace the power supply PWA. If voltage is not between 11 and 17 VAC, contact Hospira.
MALFUNCTION XX (Error code displayed in place of XX)	Infuser self-test programs have detected an internal failure	Note malfunction code displayed, then press **[OFF/RECHG]** to silence the alarm, turn off the infuser, and remove the infuser from service.
No audible alarm or audible alarm level control	Defective audible level switch Defective power supply PWA	Replace the audible level switch Replace the power supply PWA

6.4 SERVICE TEST AND PVT TROUBLESHOOTING

Table 6-3 describes failures that may be detected during service tests *(see Section 5.2.4)*.

Table 6-4 describes failures that may be detected during the PVT *(see Section 5.2)*.

If a malfunction code displays, see *Section 6.3.3*.

Table 6-3. Service Test Troubleshooting

Service Test Failure	Possible Cause	Corrective Action
Service test mode tests *Section 5.2.4*	Infuser not in cold start Defective touchswitch Defective CPU/display PWA	Hold **[OFF/RECHG]** for six seconds Replace front panel Replace CPU/display PWA
Software Version	Defective CPU/display PWA	Replace CPU/display PWA
Elapsed Days	Defective CPU/display PWA	Replace CPU/display PWA
Internal RAM	Defective CPU/display PWA	Replace CPU/display PWA
External RAM ADRS	Defective CPU/display PWA	Replace CPU/display PWA
External RAM Cell	Defective CPU/display PWA	Replace CPU/display PWA
CPU	Defective CPU/display PWA	Replace CPU/display PWA
ROM	Defective CPU/display PWA	Replace CPU/display PWA
Real Time Clock	Defective CPU/display PWA	Replace CPU/display PWA
LED	Defective CPU/display PWA	Replace CPU/display PWA
LCD	Defective CPU/display PWA	Replace CPU/display PWA
Keypad	Loose connection/damaged ribbon cable Defective touchswitch Defective CPU/display PWA	Check ribbon cable from touchswitch to J13 on CPU/display PWA Replace front panel, if required Check ribbon cable from J12 on CPU/display PWA to J7 on power supply PWA Replace ribbon cable, if required Replace front panel Replace CPU/display PWA
Indicator	Loose connection/defective ribbon cable	Check ribbon cable from J12 on CPU/display PWA to J7 on power supply PWA Replace ribbon cable, if required

Table 6-3. Service Test Troubleshooting

Service Test Failure	Possible Cause	Corrective Action
Alarm	Defective CPU/display PWA	Replace CPU/display PWA
	Defective power supply PWA	Replace power supply PWA
	Loose connection/defective ribbon cable	Check connection at J8 on power supply PWA
		Inspect interconnect PWA cable for damage, and replace, if required
	Defective audible level switch	Replace audible level switch or interconnect PWA
	Defective piezoelectric alarm	Replace piezoelectric alarm or interconnect PWA
Motor Rotation	Defective power supply PWA	Replace power supply PWA
	Defective CPU/display PWA	Replace CPU/display PWA
	Lead screw dirty or needs lubrication	Lubricate lead screw
	Loose connection	Check connector J5 on power supply PWA
	Defective motor assembly	Replace motor assembly
Security Door	Loose connection	Check connector J8 and J7 on power supply PWA
	Door lock switch out of adjustment or defective	Adjust or replace door lock switch
	Defective power supply PWA	Replace power supply PWA
Syringe Test	Loose connection	Check connector J6 or J4 on power supply PWA
	Injector sensor switch defective	Replace injector sensor switch
	Vial sensor switch out of adjustment or defective	Adjust or replace vial sensor switch
	Defective power supply PWA	Replace power supply PWA
Low/Empty Syringe	Loose connection	Check connector J4 on power supply PWA
	Syringe low sensor switch out of adjustment or defective (PCA only)	Adjust or replace syringe low switch
	Syringe empty sensor switch out of adjustment or defective	Adjust or replace syringe empty switch
	Defective power supply PWA	Replace power supply PWA
Patient Pendent Tone Selection	Defective CPU/display PWA	Replace CPU/display PWA
12/24 Hour Clock Selection (PCA Plus)	Defective CPU/display PWA	Replace CPU/display PWA
Select RX Concentration (3.1 software and higher)	Incorrect software version	Verify software version

Table 6-4. Troubleshooting with the PVT

Service Test Failure	Possible Cause	Corrective Action
Delivery Accuracy Test *Section 5.2.5*	PCA set not primed properly	Prime set/check clamps
	Defective power supply PWA	Replace power supply PWA
	Defective motor assembly	Replace motor assembly
Occlusion Test *Section 5.2.6*	Set not installed or primed properly	Prime set
	Occlusion pressure switch out of adjustment or defective	Adjust or replace occlusion pressure switch
	Defective power supply PWA	Replace power supply PWA
PCA + Continuous Test *Section 5.2.7*	Set not installed or not primed properly	Check installation and prime set
	Infuser not set up properly	Check infuser settings
Patient Control Jack Test *Section 5.2.8*	Loose connection	Check connector J8 on the power supply PWA
	Defective interconnect PWA cable	Replace interconnect PWA cable
	Defective patient pendant jack	Replace patient pendant jack or interconnect PWA
Patient Pendant Assembly Test *Section 5.2.9*	Defective patient pendant assembly	Replace patient pendant assembly
Battery Charger Test *Section 5.2.10*	Loose connection	Check connector J3 on the power supply PWA
		Check connector P1 and P2 on the boost charger PWA
	Defective boost charger PWA	Replace boost charger PWA
	Defective power supply PWA	Replace power supply PWA
Electrical Safety Test *Section 5.2.11*	Insufficient earth connection	Check for adequate earth connection
	Defective AC power cord plug	Replace AC power cord plug
	Defective AC power cord	Replace AC power cord

This page intentionally left blank.

Section 7

REPLACEABLE PARTS AND REPAIRS

This section describes adjustment procedures and replacement procedures for parts and subassemblies of the infusion system that are repairable within the scope of this manual.

7.1 REPLACEABLE PARTS

Replaceable parts for the infusion system are itemized in the Illustrated Parts Breakdown (IPB) and are identified in *Figure 9-1*. *Table 9-2* identifies each part by an index number that correlates to *Figure 9-1*. To view the online replacement parts list, visit the website at **www.hospiraparts.com**.

7.2 ADJUSTMENT PROCEDURES

This section contains safety and equipment precautions, required tools and materials, and step-by-step adjustment procedures. Unless otherwise stated, always perform the PVT after an adjustment procedure.

Unless otherwise indicated, adjustment procedures require an empty syringe to be installed in the cradle.

Figures are rendered as graphic representations to approximate actual product. Therefore, figures may not exactly reflect the product.

7.2.1 SAFETY AND EQUIPMENT PRECAUTIONS

Before opening the front enclosure of the infuser, take all necessary precautions for working on high-voltage equipment.

WARNING: EXPLOSION HAZARD EXISTS IF THE INFUSER IS SERVICED IN THE PRESENCE OF FLAMMABLE SUBSTANCES.

WARNING: UNLESS OTHERWISE INDICATED, DISCONNECT THE INFUSER FROM AC POWER BEFORE PERFORMING ADJUSTMENT PROCEDURES.

CAUTION: Use proper ESD grounding techniques when handling components. Wear an antistatic wrist strap and use an ESD-protected workstation. Store PWAs in antistatic bags before placing on any surface.

7.2.2
REQUIRED TOOLS AND MATERIALS

The following tools and materials, or equivalents, are required for the adjustment procedures in this section. In addition, the tools and materials required for a specific adjustment procedure are listed at the beginning of each procedure.

- Set of Allen wrenches
- Set of nutdrivers
- Set of open end wrenches
- Flat blade screwdriver
- Set of Phillips screwdrivers
- Needle nose pliers
- X-acto® knife
- Digital pressure meter (DPM)
- Trimpot tool
- Permanent marker
- Small brush
- Lint-free cloth or cotton swabs
- Red GLPT insulating varnish
- Water-filled and empty syringe
- Three-way stopcock
- IV administration set
- Syringe limit gauge
- Grease (Braycote 804)
- Isopropyl alcohol or Electro-Wash 2000

7.2.3
SEPARATING FRONT AND REAR CASE ASSEMBLIES

The front and rear case assemblies must be separated before performing any adjustment procedure.

Recommended tools for this procedure are a No. 2 Phillips screwdriver, set of nutdrivers, and permanent marker.

To separate the front and rear case assemblies, see *Figure 7-1*, and proceed as follows:

1. Disconnect the infuser from AC power.
2. Set the infuser upright on a flat surface. Confirm the security door is unlocked.
3. Using the No. 2 Phillips screwdriver, remove the AC power cord retainer plate by removing the screw that attaches the retainer plate to the back of the infuser.
4. Using the No. 2 Phillips screwdriver, remove the long 10-32 flat head Phillips screws from each corner of the infuser rear case assembly.
5. Separate the front case from the rear case.

   ✎ **Note:** Prior to disconnecting a connector, verify the connector is numbered. If the connector contains no identifier, number it with a permanent marker.

6. Disconnect the 28 pin, 2 row connector from J8 on the power supply PWA.
7. Disconnect the 16 pin connector from J9 on the power supply PWA.
8. Disconnect the 4 pin connector from J3 on the power supply PWA.
9. **3.1 series only**: Disconnect the 4 pin and 6 pin ribbon cables from J1 and J2 on the battery boost charger PWA at the back of the rear case assembly.

   ✎ **Note:** Ribbon cables are hard-wired to the power supply PWA. Use care and do not damage the cables when disconnecting them.

10. Place the front assembly on the work surface.
11. Using a 5/16 nutdriver, remove the nut and star lock washer that secure the ground wire (green with yellow stripe) to the motor gear case, then remove the nut that secures the ground wire to the front panel. The nut may be hidden by the ribbon cable connecting the bottom of the two PWAs.
12. Disconnect connectors J4, J5, J6, and J7 on the power supply PWA.
13. Reassemble the infuser in the exact reverse order of disassembly.
14. Close and lock the security door.

To verify successful separation and reassembly of the front and rear case assemblies, perform the PVT in *Section 5.2*.

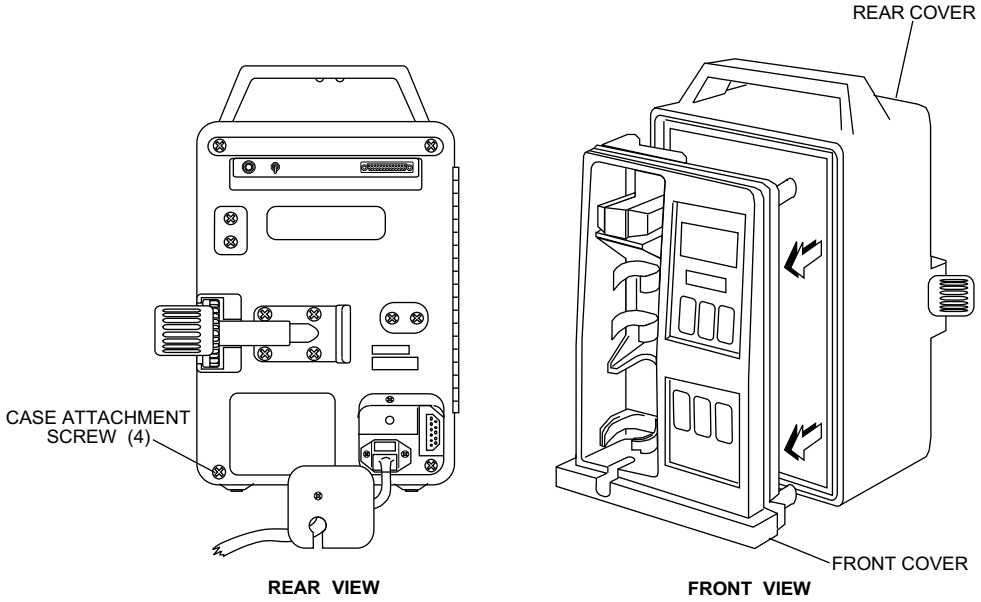

Figure 7-1. Separating Front and Rear Case Assemblies

7.2.4
INJECTOR SENSOR SWITCH ADJUSTMENT

The injector sensor switch is adjustable on most PCA Plus Series Infusers with final assemblies 850-04250-002 through 850-04250-008.

PCA Plus II Series infusers with final assemblies 850-04250-010 and higher do not contain an injector sensor switch bracket. Therefore, the injector switch is not adjustable.

Some configurations of PCA Plus Series infusers with final assembly numbers 850-04250-006 through 850-04250-008 may not contain an injector sensor switch bracket.

Recommended tools for this procedure are a No. 2 Phillips screwdriver, set of nutdrivers, and red GLPT insulating varnish.

To adjust the injector sensor switch, see *Figure 7-2* or *Figure 7-3*, and proceed as follows:

1. Disconnect the infuser from AC power.
2. Separate the front and rear case assemblies as described in *Section 7.2.3*.
3. Using a 3/16 nutdriver, loosen the two switch mounting screws until the switch holder can be easily moved. Do not loosen the screws so much that the switch bracket rocks from side to side.
4. Position the switch bracket parallel to the surface and 1/32 inch from the infuser case, and tighten the screws.
5. Apply red GLPT insulating varnish to the screw heads.
6. Reassemble the infuser in exact reverse order of disassembly.
7. Close and lock the security door.

To verify successful adjustment of the injector sensor switch, perform the PVT in *Section 5.2*.

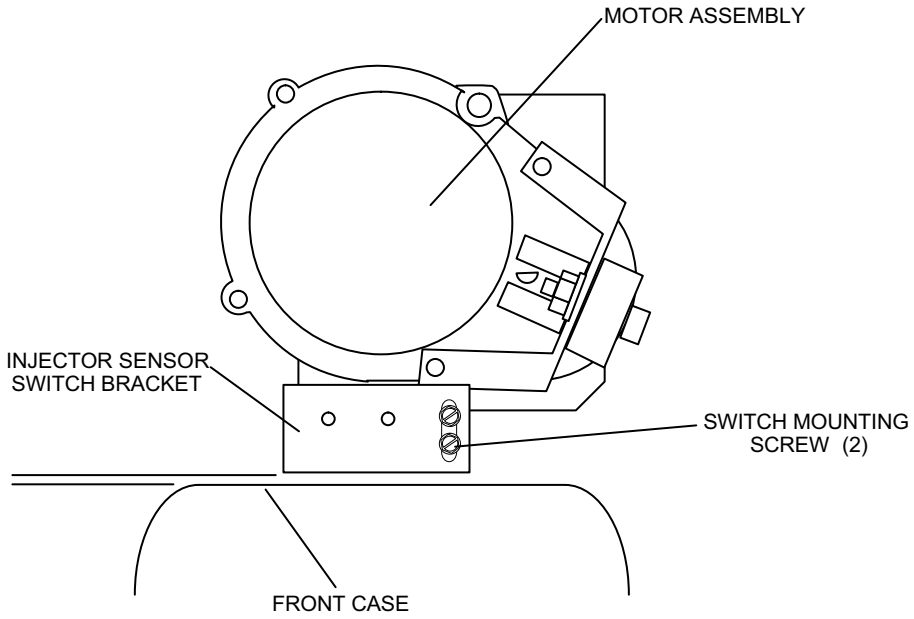

Figure 7-2. Injector Sensor Switch (-008 and Lower)

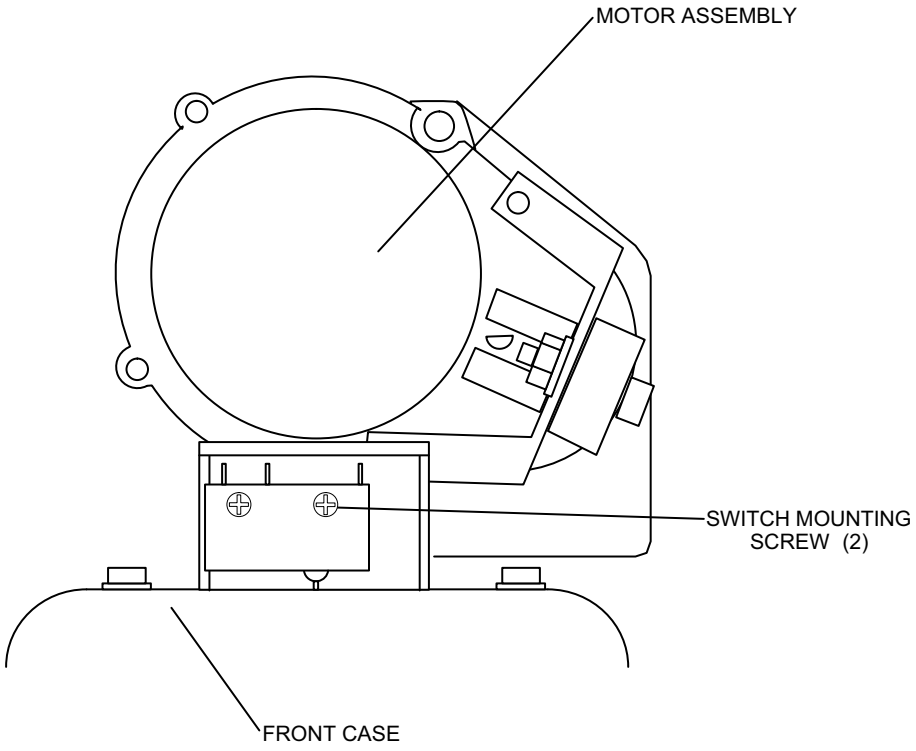

Figure 7-3. Injector Sensor Switch (-010 and Higher)

7.2.5
VIAL SENSOR SWITCH ADJUSTMENT

Recommended tools for this procedure are a No. 2 Phillips screwdriver, set of nutdrivers, and red GLPT insulating varnish.

To adjust the vial sensor switch, see *Figure 7-4*, and proceed as follows:

Infusers with final assemblies 850-04250-010 and higher do not contain a vial sensor switch bracket. Therefore, no adjustment is required on infusers with final assembly number -010 and higher *(see Figure 7-5)*.

1. Disconnect the infuser from AC power.
2. Separate the front and rear case assemblies as described in *Section 7.2.3*.
3. Using a 3/16 nutdriver, loosen the two vial sensor switch adjustment screws until the switch holder can be easily moved. Do not loosen the screws so much that the switch bracket rocks from side to side.
4. Place the switch bracket upright. Move the switch up slowly until it clicks off, then move the switch down slowly until it clicks on. Move the switch down further (approximately 1/16 inch) to verify the switch detects a vial. Tighten the screws while keeping the switch bracket level.
5. Apply red GLPT insulating varnish to the screw heads.
6. Reassemble the infuser in the exact reverse order of disassembly.
7. Close and lock the security door.

To verify successful adjustment of the vial sensor switch, perform the PVT in *Section 5.2*.

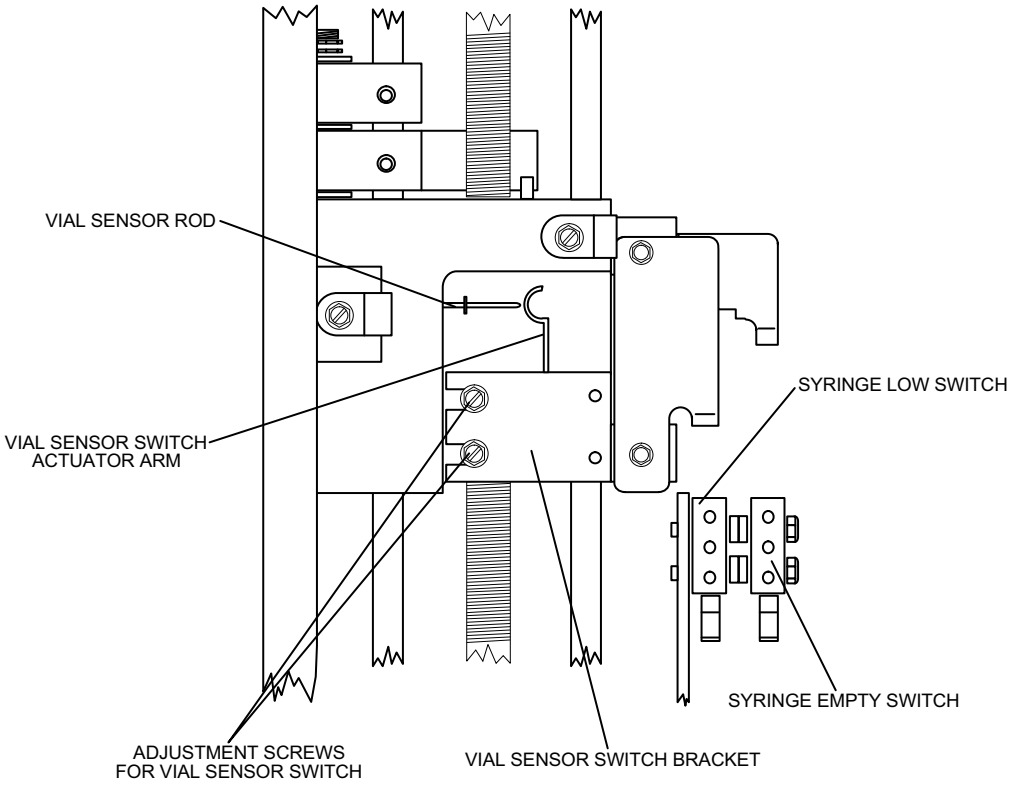

Figure 7-4. Vial Sensor Switch and Syringe Low Switch (-008 and Lower)

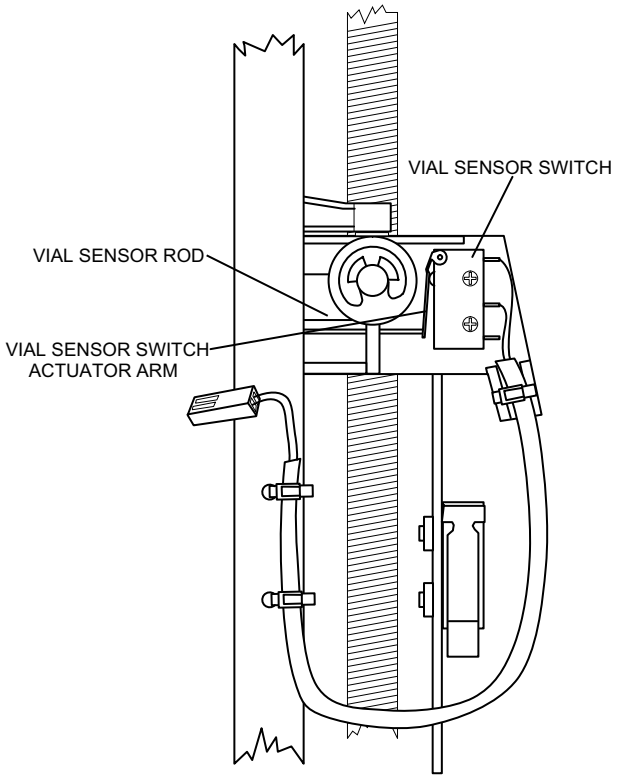

Figure 7-5. Vial Sensor Switch and Syringe Low Switch (-010 and Higher)

7.2.6
SYRINGE LOW SWITCH ADJUSTMENT (PCA PLUS ONLY)

Recommended tools for this procedure are a No. 2 Phillips screwdriver, set of nutdrivers, syringe limit gauge, and red GLPT insulating varnish.

To adjust the syringe low switch, see *Figure 7-4*, and proceed as follows:

1. Disconnect the infuser from AC power.
2. Separate the front and rear case assemblies as described in *Section 7.2.3*.
3. Install the syringe limit gauge in the cradle. Squeeze the cradle clamps and move the cradle up to the limit allowed by the gauge. Verify that the gauge dial reads approximately 0.05 inch (0.127 cm).
4. Start the infuser using any drug/concentration setting. Purge the system until the gauge dial reads approximately 0.1 inch.
5. Using a 3/16 nutdriver, loosen the two screws securing the syringe low switch bracket. Move the switch bracket until the switch clicks on, then tighten the screws.
6. Move the cradle up to the limit allowed by the gauge. Program the infuser for normal operation and verify that the syringe low alarm occurs when the gauge dial reads between 0.05 inch and 0.15 inch.
7. Apply red GLPT insulating varnish to the screw heads.
8. Reassemble the infuser in the exact reverse order of disassembly.
9. Close and lock the security door.

To verify successful adjustment of the syringe low switch, perform the PVT in *Section 5.2*.

7.2.7
SYRINGE EMPTY SWITCH ADJUSTMENT

Recommended tools for this procedure are a No. 2 Phillips screwdriver, set of nutdrivers, syringe limit gauge, and red GLPT insulating varnish.

To adjust the syringe empty switch, see *Figure 7-6* or *Figure 7-7*, and proceed as follows:

1. Disconnect the infuser from AC power.
2. Separate the front and rear case assemblies as described in *Section 7.2.3*.
3. Install the syringe limit gauge in the cradle. Squeeze the cradle clamps and move the cradle until the dial reads approximately 0.3 inch.
4. When the LCD screen displays **PURGE THE SYSTEM NOW?**, press **[YES/ENTER]**. Purge the system until the gauge reads approximately 0.39 inch. If the empty syringe alarm is activated before the system is purged, loosen the syringe empty adjustment screws and move the switch bracket up until the switch clicks off and the alarm stops.
5. Loosen the adjustment screws as necessary. Move the switch bracket down slowly until the switch clicks on, then tighten the screws.
6. Adjust the cradle until the gauge dial reads approximately 0.3 inch. Set the infuser for **PCA Only** mode delivery. When the LCD screen displays **SELECT MODE PCA ONLY?**, press **[YES/ENTER]**.
7. Set a PCA dose of 5 mg.
8. Close and lock the security door.
9. When three asterisks (***) appear on the LCD screen, press the patient pendant pushbutton.
10. Verify the empty syringe alarm occurs when the dial reads between 0.39 and 0.41 inch. If the alarm does not occur within these parameters, return to Step 4 and vary the setting to less than or greater than 0.39 inch, as appropriate.
11. Tighten the screws and apply red GLPT insulating varnish to the screw heads.
12. Reassemble the infuser in the exact reverse order of disassembly.
13. Close and lock the security door.

To verify successful adjustment of the syringe empty switch, perform the PVT in *Section 5.2*.

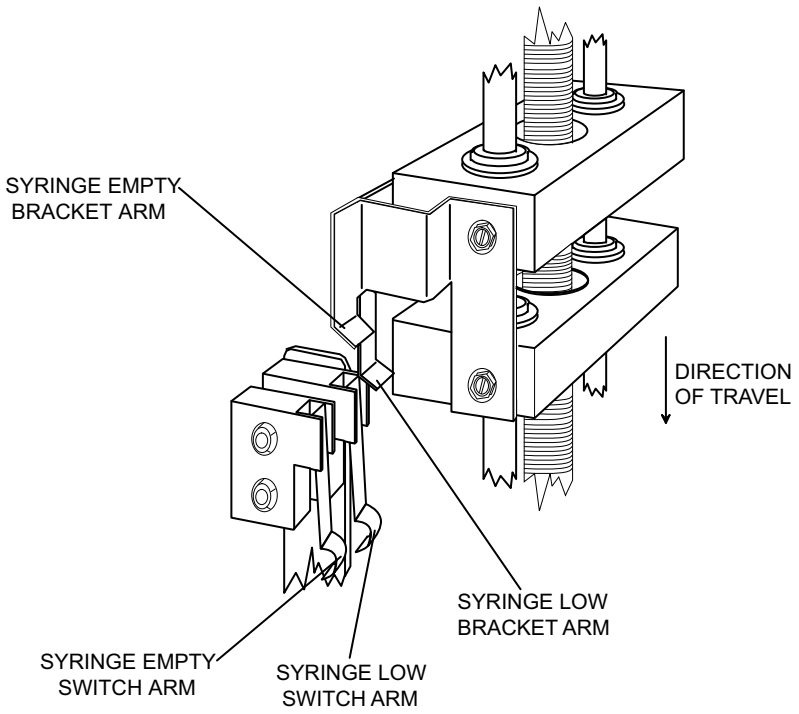

Figure 7-6. Syringe Empty Switch (-008 and Lower)

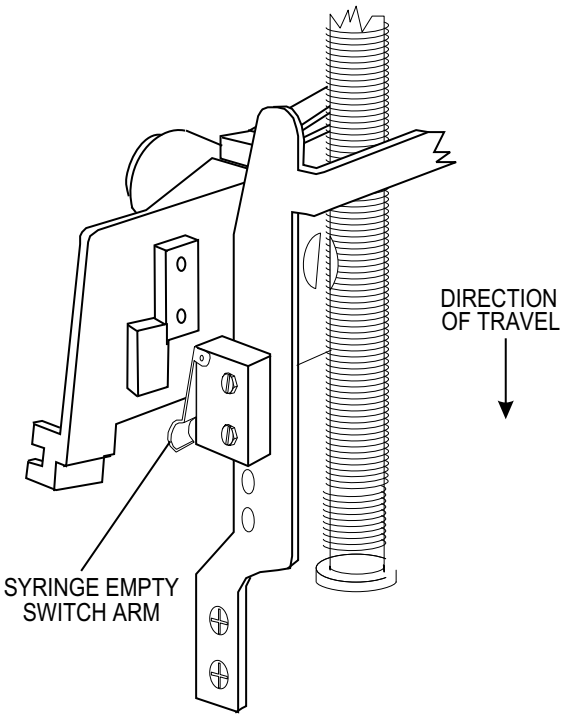

Figure 7-7. Syringe Empty Switch (-010 and Higher)

7.2.8
OCCLUSION ALARM SWITCH TEST AND ADJUSTMENT

Recommended tools for this procedure are as follows:

- Set of Phillips screwdrivers
- Set of nutdrivers
- Set of open end wrenches
- 5/6 Allen wrench
- X-acto® knife
- Digital pressure meter (DPM)
- Red GLPT insulating varnish
- Water-filled syringe
- Three-way stopcock
- IV administration set

7.2.8.1
OCCLUSION ALARM SWITCH TEST

To perform the occlusion alarm switch test, *see Figure 7-8*, and proceed as follows:

1. Disconnect the infuser from AC power.
2. Using a three-way stopcock, attach the DPM to the end of the patient line.
3. Install a water-filled syringe and an IV administration set into the infuser.
4. Purge the set until water flows out of the stopcock valve, then close the valve. When the LCD screen displays **DRUG: Rx MORPHINE 1 MG/ML? YES OR NO**, press **[YES/ENTER]**.
5. Program a loading dose of 10 mg. Allow the infuser to operate until an occlusion alarm sounds.
6. Note the reading on the meter when the occlusion alarm occurs. If the reading is not between 14 and 19 psig (96.6 and 131.1 kPa) for -008 and lower or 12.5 and 17.5 psig (86.25 and 120.75 kPa) for -010 and higher, perform the occlusion alarm adjustment procedure in *Section 7.2.8.2* or *Section 7.2.8.3*.

If the reading is between the specified parameters, perform the PVT in *Section 5.2*.

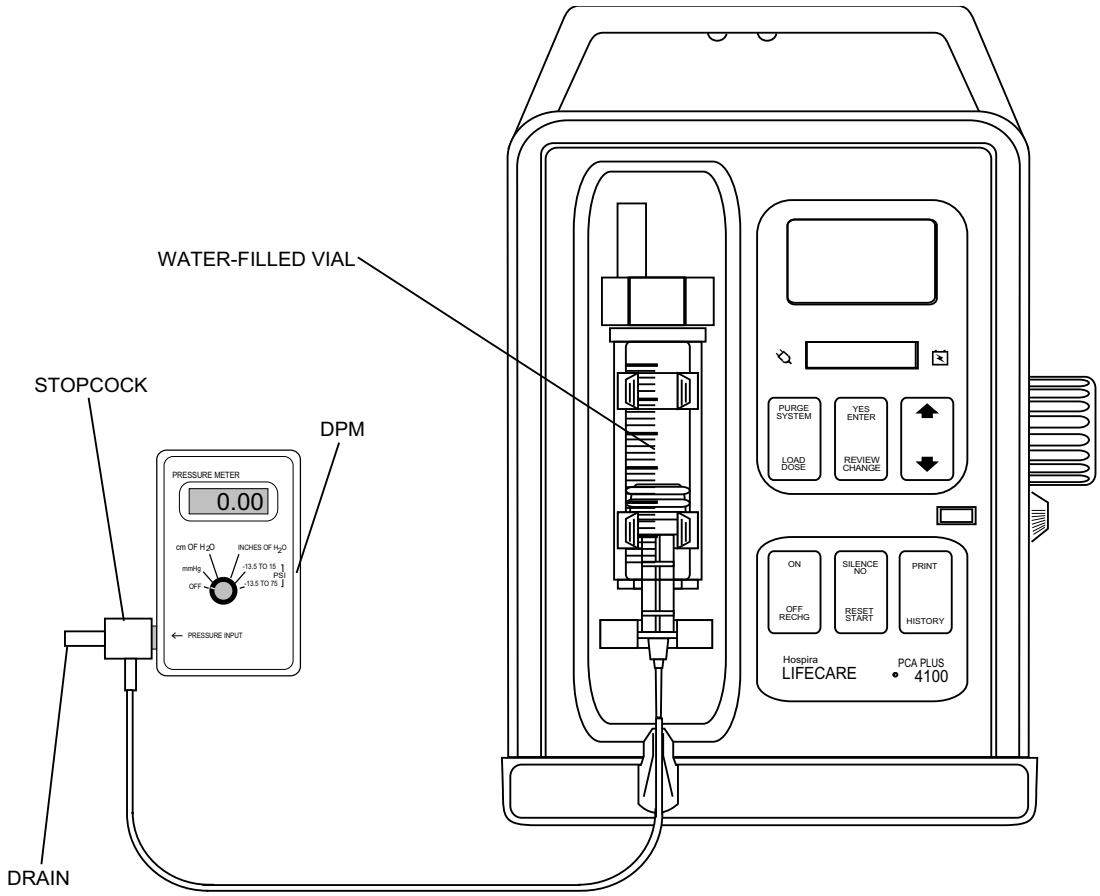

Figure 7-8. Occlusion Alarm Test Setup

7.2.8.2

OCCLUSION ALARM SWITCH AND PRESSURE ADJUSTMENT (-008 AND LOWER)

To adjust the occlusion alarm switch and pressure, see *Figure 7-9* , and proceed as follows:

1. Separate the front and rear case assemblies as described in *Section 7.2.3*.
2. Examine the position of the occlusion alarm switch. If the switch button is in contact with the switch actuator, proceed to Step 5. If the switch button is not making contact with the switch actuator, use an 11/32 open end wrench to loosen the bracket locknut at the top of the bracket.
3. Using a 9/32 Allen wrench, adjust the set screw so the switch button makes contact with the switch actuator, but does not open the switch.
4. Tighten the bracket locknut, using the 11/32 open end wrench, and apply red GLPT insulating varnish to prevent the set screw from turning.
5. Using a 5/16 open end wrench, loosen the lower locknut below the compression spring.
6. Connect the cables from the rear case assembly to the PWAs and slide assembly to allow the infuser to operate with the case open. Support the front case assembly to keep it upright for the adjustment procedure.

7. Install a water-filled syringe into the infuser. Connect an IV administration set, DPM, and stopcock. Open the stopcock valve.
8. Purge the system until water flows out of the stopcock valve, then close the valve. When the LCD screen displays **DRUG: Rx MORPHINE 1 MG/ML? YES OR NO**, press **[YES/ENTER]**.
9. Program a loading dose of 10 mg. Allow the infuser to operate until an occlusion alarm sounds or the pressure reaches 19 psig (131.1 kPa).
10. If the occlusion alarm sounds before the pressure reaches 14 psig (96.6 kPa), relieve the fluid pressure by opening the stopcock valve. Tighten the upper locknut one-half turn against the compression spring, then repeat Step 8.
11. If the occlusion alarm does not sound at 19 psig (131.1 kPa), relieve the fluid pressure, loosen the upper locknut one-half turn, then repeat Step 8.
12. When the infuser occludes at between 14 and 19 psig (96.6 and 131.1 kPa), tighten the lower locknut against the upper locknut. Use one 5/16 inch open end wrench to hold the upper locknut and another 5/16 inch open end wrench to tighten the lower locknut against the upper locknut.
13. Close and lock the security door.

To verify successful adjustment of the occlusion alarm switch and pressure, perform the PVT in *Section 5.2*.

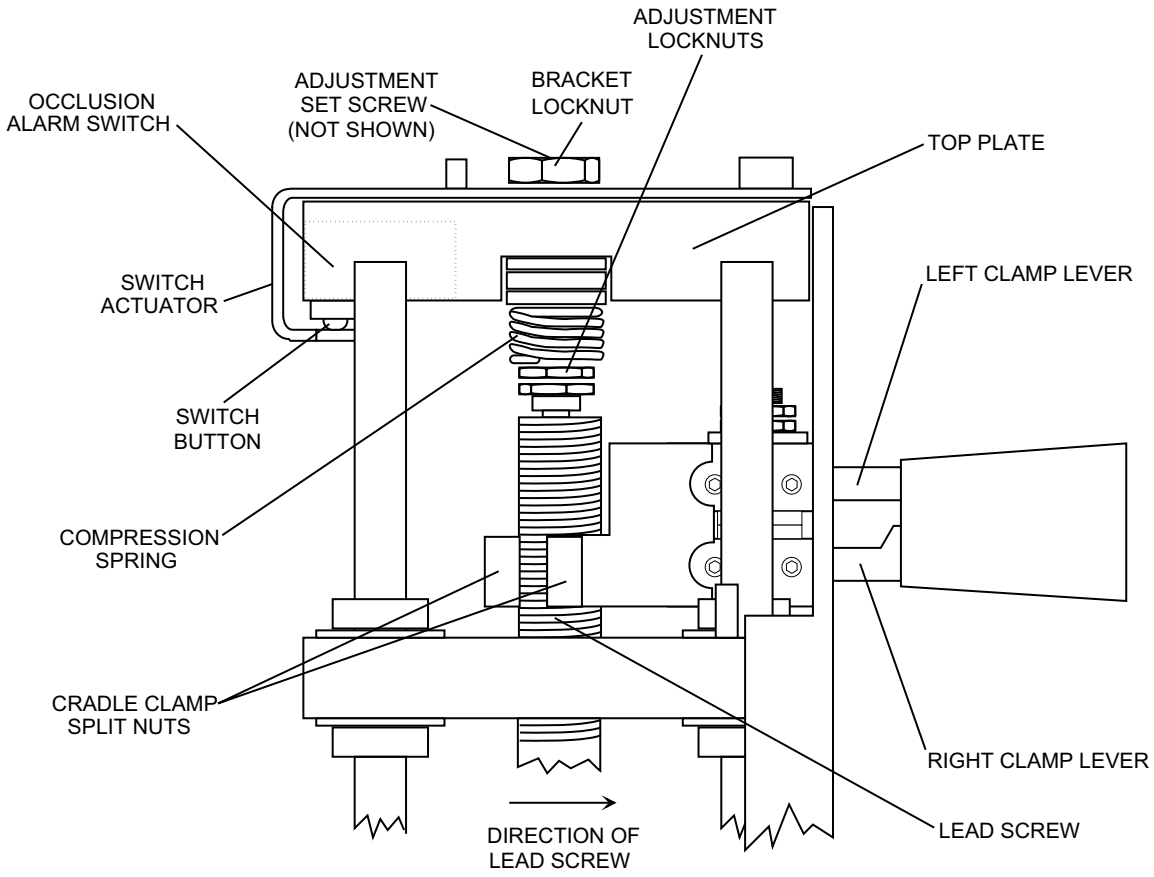

Figure 7-9. Occlusion Alarm Pressure Adjustment (-008 and Lower)

7.2.8.3
OCCLUSION ALARM SWITCH AND PRESSURE ADJUSTMENT (-010 AND HIGHER)

To adjust the occlusion alarm switch and pressure, see *Figure 7-10*, and proceed as follows:

1. Separate the front and rear case assemblies as described in *Section 7.2.3*.
2. Examine the position of the occlusion alarm switch. If the switch actuator is in contact with the switch button, proceed to Step 3. If the switch actuator is not making contact with the switch button, use a No. 0 Phillips screwdriver to loosen the screw on the switch actuator. Adjust the screw until the switch actuator contacts the switch button, but does not trip the switch.
3. Connect the cables from the rear case assembly to the PWAs and slide assembly to allow the infuser to operate with the case open. Support the front case assembly to keep it upright for the adjustment procedure.
4. Install a water-filled syringe into the infuser. Connect an IV administration set, DPM, and stopcock. Open the stopcock valve.
5. Purge the system until water flows out of the stopcock valve, then close the valve. When the LCD screen displays **DRUG: Rx MORPHINE 1 MG/ML? YES OR NO**, press **[YES/ENTER]**.
6. Set and initiate a loading dose of 10 mg. Allow the infuser to operate until an occlusion alarm sounds or the pressure reaches 17.5 psig (120.75 kPa).
7. If the occlusion alarm sounds before the pressure reaches 12.5 psig (86.25 kPa), relieve the fluid pressure by opening the stopcock valve. Loosen the set screw on the thumb nut and turn the thumb nut clockwise to tighten, then repeat Step 5.
8. If the occlusion alarm does not sound at or before 17.5 psig (120.75 kPa), relieve the fluid pressure by opening the stopcock valve. Loosen the set screw on the thumb nut and turn the thumb nut counterclockwise to loosen, then repeat Step 5.
9. When the infuser occludes at between 12.5 and 17.5 psig (86.25 and 120.75 kPa), retighten the set screw on the thumb nut.
10. Close and lock the security door.

To verify successful adjustment of the occlusion switch and pressure, perform the PVT in *Section 5.2*.

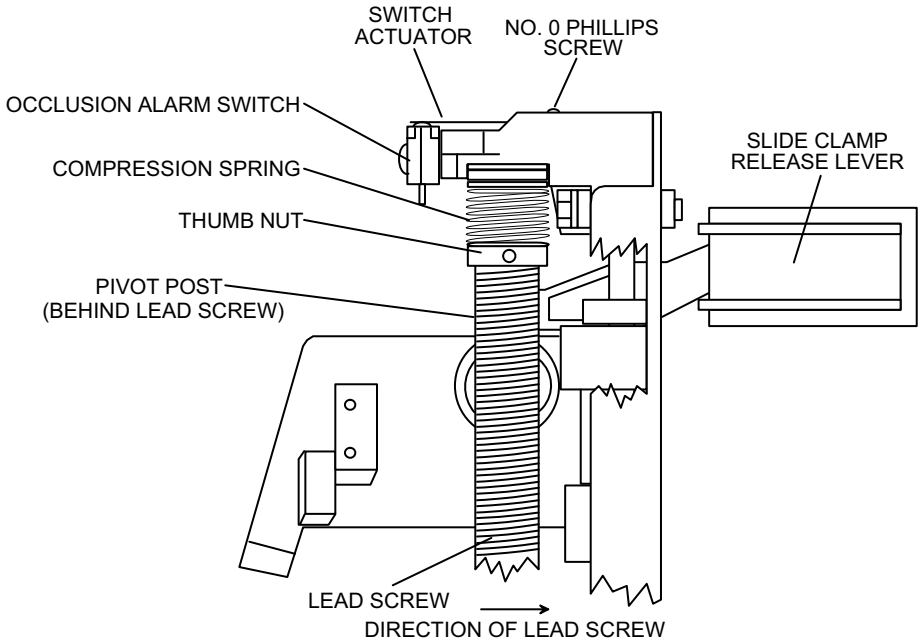

Figure 7-10. Occlusion Alarm Pressure Adjustment (-010 and Higher)

7.2.9
LCD INTENSITY ADJUSTMENT

The recommended tool for this procedure is a trim pot adjustment tool.

To adjust the LCD intensity, see *Figure 7-11*, and proceed as follows:

1. Remove the power supply PWA as described in *Section 7.3.11*.
2. Remove the four spacers from the CPU/display PWA.
3. Lift the CPU/display PWA from the front enclosure. Remove the flexible circuit cable from J13 on the CPU/display PWA.
4. Position the power supply PWA and the CPU/display PWA so the resistor R19 adjustment screw is accessible. Connect P3 of the power cable to J3 on the power supply PWA. Connect the 40 pin ribbon cable to J7 on the power supply PWA.

   CAUTION: Assure the power supply PWA and the CPU/display PWA remain separated during the adjustment procedure.

5. Connect the infuser to AC power. Using the trim pot tool, adjust resistor R19 so the LCD screen can be read from a distance of approximately three feet.
6. Disconnect the infuser from AC power. Connect the flexible circuit cable to J13. Insert the CPU/display PWA in the front enclosure, and replace the four spacers.
7. Replace the power supply PWA in the exact reverse order of its removal.

To verify successful adjustment of the LCD intensity, perform the PVT in *Section 5.2*.

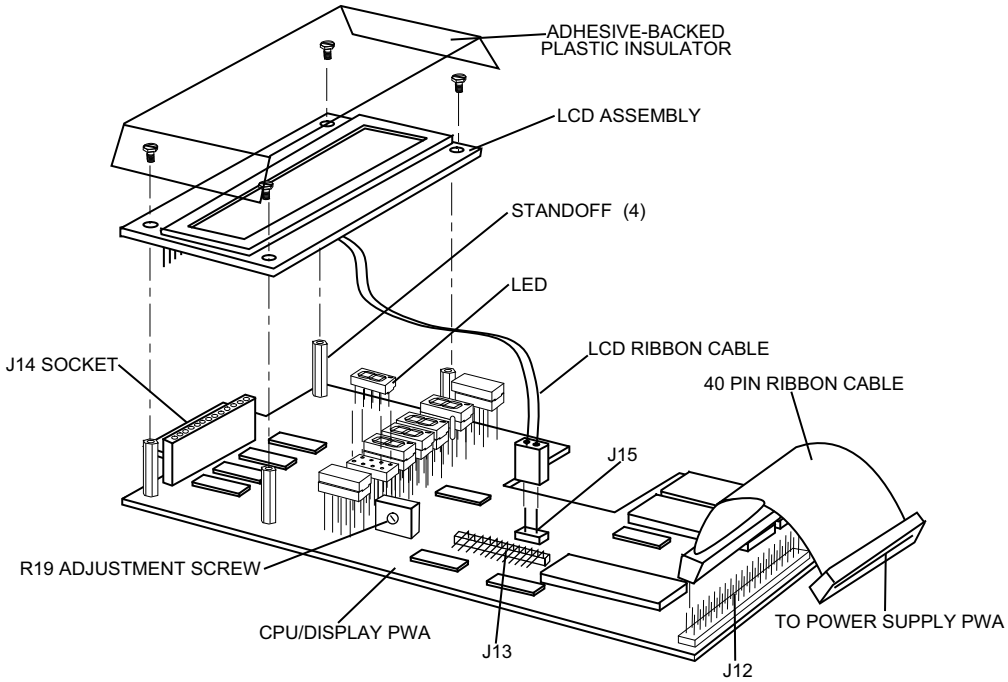

Figure 7-11. CPU/Display PWA, LED, and LCD Assembly

7.2.10
SETTING THE REAL-TIME CLOCK (PCA PLUS II)

The PCA Plus II Series Infuser real-time clock tracks time. Therefore, infuser operations require that the real-time clock be operating properly. At start up, after successful completion of the self test, the time and date are displayed on the LCD screen.

The real-time clock must be set under the following circumstances:

- Initial installation
- Time change
- Following complete battery discharge

No tools are required for this procedure.

To reset the real-time clock, proceed as follows:

1. Press **[NO]** to advance beyond the **CLEAR?** screen.
2. Press **[NO]** to advance beyond the **PURGE SYSTEM NOW** screen.
3. Press **[YES/ENTER]** to select the first available drug screen.
4. Press **[NO]** to advance beyond the **ADMINISTER LOADING DOSE** screen.
5. Press **[YES/ENTER]** to select **PCA ONLY** mode.
6. Press **[YES/ENTER]** to select the displayed PCA dose.
7. Press **[YES/ENTER]** to select the displayed **LOCKOUT INTERVAL**.
8. Press **[NO]** to advance beyond the **4 HOUR DOSE LIMIT**.

9. Press **[REVIEW CHANGE]** to advance beyond the **PCA SETTINGS** screen.
10. Press **[NO]** to advance beyond the **CHANGE? ANY SETTINGS:/MODE** screen.
11. Press **[YES/ENTER]** to select the **CHANGE?** screen to reset time and date. If the fields stop flashing before the correct time and date are set, press **[NO]** to restart the flashing.
12. Press **[]** or **[]** to enter the correct value.
13. Press **[REVIEW CHANGE]** to advance the flashing field to the next field to be changed.
14. When all fields have been set, the LCD screen displays **ACCEPT?**. Press **[YES/ENTER]** to accept the values.

Setting the real-time clock is routine maintenance and no verification procedure is normally required. However, if the infuser may have been damaged during this procedure, perform the PVT in *Section 5.2*.

7.2.11
DOOR LOCK SWITCH ADJUSTMENT

The recommended tool for this procedure is needle nose pliers.

To adjust the door lock switch, proceed as follows:

1. Disconnect the infuser from AC power.
2. Separate the front and rear case assemblies as described in *Section 7.2.3*.
3. Press the door lock actuator arm and listen for switch actuation.
4. Close and lock the security door, and confirm the door hook and the door lock actuator hold the door closed.
5. With the security door closed, turn the key to the unlocked and locked positions while listening for switch actuation. If the door lock switch is adjusted properly, switch actuation should be heard each time the door is locked or unlocked. If the door lock switch does not require adjustment, proceed to Step 7.
6. Using needle nose pliers, carefully bend the door lock actuator or the switch actuator arm (as applicable) until proper adjustment is achieved. Be careful not to damage the switch.
7. Reassemble the infuser in the exact reverse order of disassembly.
8. Close and lock the security door.

To verify successful adjustment of the door lock switch, perform the PVT in *Section 5.2*.

7.2.12
LEAD SCREW LUBRICATION

Recommended tools for this procedure are Electro-Wash 2000 or isopropyl alcohol, lint-free cloth or cotton swabs, Braycote grease, and a small brush.

1. Disconnect the infuser from AC power.
2. Separate the front and rear case assemblies as described in *Section 7.2.3*.
3. Using Electro-Wash 2000 or isopropyl alcohol and a small brush or cotton swabs, remove all old grease and residue from the lead screw.

   Note: If using isopropyl alcohol, use extra care to assure that all residual lubricant is removed.

4. Apply a thin coating of grease and work it into the threads along the length of the shaft. Do not fill the threads. Move the slide clamp as necessary to clean and lubricate the length of the lead screw.
5. Reassemble the front and rear case assemblies in the exact reverse order of disassembly.

To verify successful lead screw lubrication, perform the PVT in *Section 5.2*.

7.3
REPLACEMENT PROCEDURES

This section contains safety and equipment precautions, required tools and materials, and step-by-step procedures for replacing parts in the infuser.

Several replacement procedures in this section require separating the front and rear case assemblies. See *Section 7.2.3* as indicated in the procedures.

Figures are rendered as graphic representations to approximate actual product. Therefore, figures may not exactly reflect the product.

Unless otherwise stated, always perform the PVT after a replacement procedure.

7.3.1
SAFETY AND EQUIPMENT PRECAUTIONS

Before opening the front enclosure of the infuser, take all necessary precautions for working on high-voltage equipment.

WARNING: EXPLOSION HAZARD EXISTS IF THE INFUSER IS SERVICED IN THE PRESENCE OF FLAMMABLE SUBSTANCES.

WARNING: UNLESS OTHERWISE INDICATED, DISCONNECT THE INFUSER FROM AC POWER BEFORE PERFORMING REPLACEMENT PROCEDURES.

CAUTION: Use proper ESD grounding techniques when handling components. Wear an antistatic wrist strap and use an ESD-protected workstation. Store PWAs in antistatic bags before placing on any surface.

7.3.2
REQUIRED TOOLS AND MATERIALS

The following tools and materials, or equivalents, are required for the replacement procedures in this section. In addition, the tools and materials required for a specific adjustment procedure are listed at the beginning of each procedure.

- Set of Allen wrenches
- Set of nutdrivers
- Set of open end wrenches
- Set of box wrenches
- Small and medium flat blade screwdriver
- Set of Phillips screwdrivers
- Needle nose pliers
- Electrician's knife
- X-acto® knife
- Wire cutters
- Wire strippers
- Soldering iron
- Solder, tin/lead, RMA type
- Shrink tubing, 1/8 inch
- Optional heat gun
- Small cable tie wraps
- Grease (Braycote 804)
- Isopropyl alcohol

7.3.3
BATTERY REPLACEMENT

The recommended tool for this procedure is a 1/4 nutdriver.

To replace the battery, see *Figure 7-12*, and proceed as follows:

1. Disconnect the infuser from AC power.
2. Place the infuser face down on a soft surface. Using the 1/4 nutdriver, remove the two 6-32 screws from the battery cover.
3. Remove and inspect the battery cover, and replace, if required.
4. Separate the battery cable from the charger circuit cable. Remove the battery and dispose of it in accordance with local battery disposal practices.
5. Connect the leads of the replacement battery to the battery connector. Assure the connection is tight.
6. Install the replacement battery into the housing so that the bottom is visible. Assure the wires are not kinked or crushed under the battery.
7. Replace the bottom cover. Confirm the battery leads are tucked inside.
8. Replace the two screws that were removed in Step 2.
9. **PCA Plus II only**: Reset the real-time clock as described in *Section 7.2.10*.

To verify successful replacement of the battery, press **[ON]** with the infuser disconnected from AC power, and verify the front panel battery symbol is lit.

Replacement of the battery and battery cover is routine maintenance and no additional verification procedure is normally required. However, if the infuser may have been damaged during this procedure, perform the PVT in *Section 5.2*.

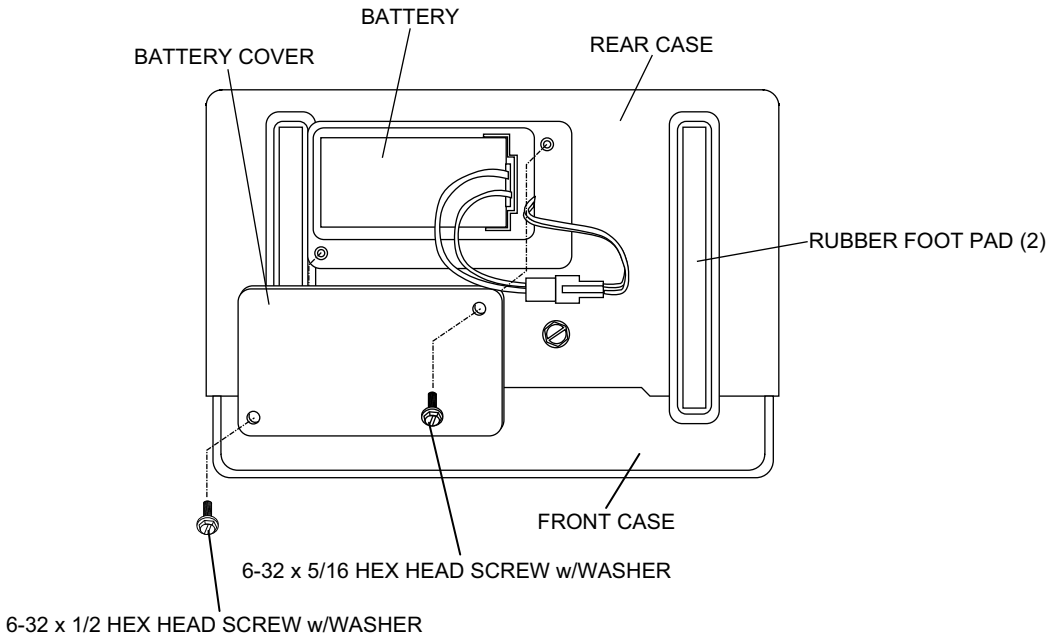

Figure 7-12. Battery Replacement

7.3.4
FUSE REPLACEMENT

Recommended tools for this procedure are a No. 2 Phillips screwdriver and small flat blade screwdriver.

To replace a fuse, see *Figure 7-13*, and proceed as follows:

1. Disconnect the infuser from AC power.
2. Place the infuser face down on a soft surface and remove the 6-32 screw that attaches the AC power cord retainer plate to the infuser rear case.
3. To access a fuse, remove the AC power cord from its receptacle by grasping the plug. Do not pull on the cord.
4. Locate the plastic fuseholder directly above the AC power receptacle. Insert a small flat blade screwdriver between the locking tab at one end of the fuseholder and the infuser housing. Press the tab toward the center of the fuseholder to release it. The fuseholder will move slightly outward when released from the one side.
5. Repeat Step 4 to release the other locking tab. The spring-loaded fuseholder will release and move outwards. Grasp both locking tabs and remove the fuseholder from the receptacle.
6. Remove the fuse and replace with an approved fuse only *(see Section 8)*. Do not use any other fuse types.
7. Insert the fuseholder into the receptacle, then press the fuseholder against the locking tabs until it clicks into position.
8. Reconnect the AC power cord to the infuser AC power receptacle.
9. Reinstall the AC power cord retainer plate with the screw that was removed in Step 2.

To verify successful replacement of a fuse, perform the PVT in *Section 5.2*.

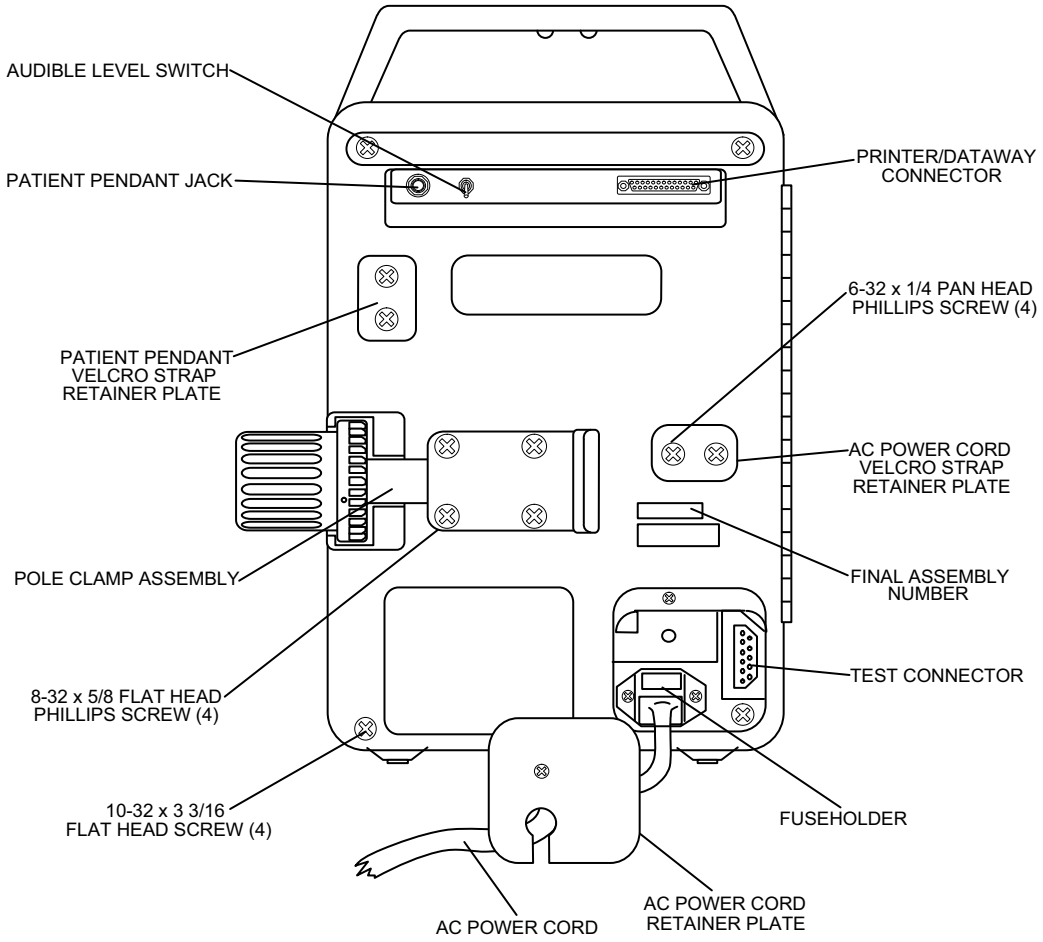

Figure 7-13. Rear Case Assembly Components

7.3.5
POLE CLAMP ASSEMBLY REPLACEMENT

The recommended tool for this procedure is a No. 2 Phillips screwdriver.

To replace the pole clamp assembly, see *Figure 7-13*, and proceed as follows:

1. Place the infuser face down on a soft surface.
2. Remove the four 8-32 screws and associated lock washers.
3. Remove the pole clamp assembly and install the replacement pole clamp assembly using the screws and lock washers that were removed in Step 2.

Replacement of the pole clamp assembly is routine maintenance and no verification procedure is normally required. However, if the infuser may have been damaged during this procedure, perform the PVT in *Section 5.2*.

7.3.6
VELCRO STRAP AND RETAINER PLATE REPLACEMENT

Velcro straps and retainer plates on the rear of the infuser secure the patient pendant and the AC power cord. This procedure details the replacement of the Velcro strap and retainer plate in both locations.

Recommended tools for this procedure are a No. 2 Phillips screwdriver and X-acto knife.

To replace the Velcro strap and retainer plate, see *Figure 7-13*, and proceed as follows:

1. Remove the two 6-32 screws that attach the Velcro strap and retainer plate to the rear of the infuser, then remove the retainer plate and strap. Do not discard the strap. The replacement Velcro strap does not have holes for mounting screws. Holes must be cut at the time of installation.
2. Place the replacement Velcro strap, with fuzzy side down, on the work surface. Place the retainer plate on the strap in the exact location as on the old strap. Use the retainer plate as a template to mark hole locations on the strap.
3. Using an X-acto knife, cut holes in the replacement strap at the marked locations.
4. Inspect the retainer plate, and replace, if required.
5. Install the replacement strap and retainer plate using the screws that were removed in Step 1.

Replacement of the Velcro strap and retainer plate is routine maintenance and no verification procedure is normally required. However, if the infuser may have been damaged during this procedure, perform the PVT in *Section 5.2*.

7.3.7
SECURITY DOOR REPLACEMENT

The recommended tool for this procedure is a No. 2 Phillips screwdriver.

To replace the security door, proceed as follows:

1. Unlock and completely open the security door (approximately 270 degrees) to reveal four mounting screws.
2. Using a Phillips screwdriver, remove the screws and the door.
3. Attach the replacement door using the screws that were removed in Step 2.
4. Close and lock the security door. Confirm the door aligns with the door latch assembly and that the door is locked.

Replacement of the security door is routine maintenance and no verification procedure is normally required. However, if the infuser may have been damaged during this procedure, perform the PVT in *Section 5.2*.

7.3.7.1
SECURITY DOOR LATCH REPLACEMENT

The recommended tool for this procedure is a No. 2 Phillips screwdriver.

To replace the security door latch, proceed as follows:

1. Unlock and completely open the security door as described in *Section 7.3.7*. From inside the door, remove the screw that secures the latch to the door.
2. From the front of the door, peel back the nameplate label and remove the latch.
3. Install the replacement latch and reattach it from inside the door using the screw that was removed in Step 2.
4. Press the nameplate label back in place, and close and lock the security door.

Replacement of the security door latch is routine maintenance and no verification procedure is normally required. However, if the infuser may have been damaged during this procedure, perform the PVT in *Section 5.2*.

7.3.8
PATIENT PENDANT ASSEMBLY REPLACEMENT

No tools are required for this procedure.

To replace the patient pendant, disconnect the control cable from the **PATIENT CONTROL** jack on the rear of the infuser and connect the replacement patient pendant.

Replacement of the patient pendant assembly is routine maintenance and no verification procedure is normally required. However, if the infuser may have been damaged during this procedure, perform the PVT in *Section 5.2*.

7.3.9
AC POWER CORD REPLACEMENT

The recommended tool for this procedure is a No. 2 Phillips screwdriver.

To replace the AC power cord, see *Figure 7-13*, and proceed as follows:

1. Disconnect the infuser from AC power.
2. Using the Phillips screwdriver, remove the screw that attaches the AC power cord retainer plate to the rear of the infuser.
3. Disconnect the AC power cord by grasping the plug. Do not pull on the power cord.
4. Install the replacement AC power cord by connecting it to the infuser AC power receptacle.
5. Reinstall the power cord retainer plate with the screw that was removed in Step 2.
6. Press **[ON/OFF]** and verify the infuser powers on.

To verify successful AC power cord replacement, perform the Electrical Safety Test in *Section 5.2.11*.

7.3.10
GASKET SEAL REPLACEMENT

✎ **Note:** Do not disconnect ribbon cables as part of this procedure.

Recommended tools for this procedure are a No. 2 Phillips screwdriver, set of nutdrivers, isopropyl alcohol, and cotton swabs.

To replace the gasket seal, proceed as follows:

1. Disconnect the infuser from AC power.
2. Separate the front and rear case assemblies as described in *Section 7.2.3*.
3. Set the rear case assembly upright with the security door open.
4. Remove the gasket seal and install the replacement gasket seal.
5. Wipe the replacement gasket seal with isopropyl alcohol.
6. Reassemble the infuser in the exact reverse order of disassembly, and close and lock the security door.

To verify successful replacement of the gasket seal, perform the PVT in *Section 5.2*.

7.3.11
POWER SUPPLY PWA REPLACEMENT

Recommended tools for this procedure are a No. 2 Phillips screwdriver, set of nutdrivers, 1/4 open end wrench, and set of Allen wrenches.

To replace the power supply PWA, see *Figure 7-14*, and proceed as follows:

1. Disconnect the infuser from AC power.
2. Separate the front and rear case assemblies as described in *Section 7.2.3*.
3. Using a 1/4 nutdriver, remove the four screws that secure the power supply PWA to the spacers. If necessary, hold the power supply PWA spacers with a 1/4 open end wrench while removing the screws.
4. Lift the power supply PWA from the spacers.
5. Install the replacement power supply PWA in the exact reverse order of removal.
6. Reassemble the infuser in the exact reverse order of disassembly, and close and lock the security door.

To verify successful replacement of the power supply PWA, perform the PVT in *Section 5.2*.

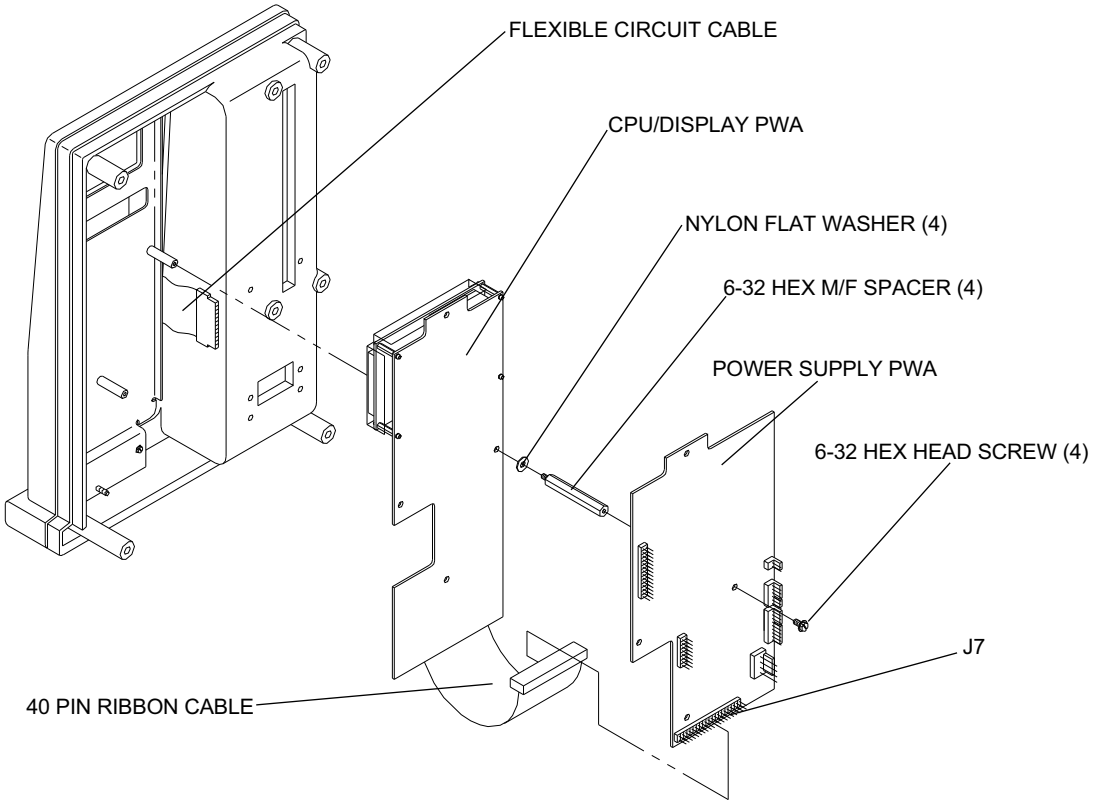

Figure 7-14. Power Supply PWA and CPU Display PWA

7.3.12
CPU/DISPLAY PWA REPLACEMENT

Recommended tools for this procedure are a No. 2 Phillips screwdriver, set of nutdrivers, 1/4 open end wrench, and set of Allen wrenches.

To replace the CPU/display PWA, see *Figure 7-14*, and proceed as follows:

1. Disconnect the infuser from AC power.
2. Separate the front and rear case assemblies as described in *Section 7.2.3*.
3. Remove the power supply PWA as described in *Section 7.3.11*.
4. Using a 1/4 nutdriver, remove the CPU/display PWA spacers and nylon washers.
5. Pivot the CPU/display PWA on its right edge to access the flexible circuit cable. Loosen the flexible circuit cable from J13 on the CPU/display PWA.
6. Remove the 40 pin ribbon cable from J12 on the CPU/display PWA, then remove the CPU/display PWA from the front panel assembly.
7. Reconnect P3 of the power cable to J3 of the power supply PWA.
8. Using a 5/16 nutdriver, reconnect the ground wire to the motor gear case.

9. Reconnect the infuser to AC power and press **[ON]**. Verify the LCD screen can be read from a distance of approximately three feet. If necessary, adjust the LCD intensity *(see Section 7.2.9)*.
10. Reassemble the infuser in the exact reverse order of disassembly.
11. Close and lock the security door.

To verify successful replacement of the CPU/display PWA, perform the PVT in *Section 5.2*.

7.3.12.1
LED REPLACEMENT

Recommended tools for this procedure are a No. 2 Phillips screwdriver, set of nutdrivers, 1/4 open end wrench, and set of Allen wrenches.

To replace an LED on the CPU/display PWA, see *Figure 7-11*, and proceed as follows:

1. Disconnect the infuser from AC power.
2. Separate the front and rear case assemblies as described in *Section 7.2.3*.
3. Remove the power supply PWA as described in *Section 7.3.11*, and the CPU/display PWA as described in *Section 7.3.12*.

   Note: LEDs are socketed and may initially be difficult to remove. Do not bend the connector pins.

4. Remove the LED and install the replacement LED.

   Note: To assure proper alignment when replacing a seven-segment LED (DS2, DS3, DS4, DS5, or DS7), assure the decimal point is in the lower right corner.

5. Reinstall the power supply PWA and the CPU/display PWA.
6. Reassemble the infuser in the exact reverse order of disassembly.
7. Close and lock the security door.

To verify successful replacement of the LED, perform the PVT in *Section 5.2*.

7.3.13
LCD ASSEMBLY REPLACEMENT

Recommended tools for this procedure are a set of Phillips screwdrivers and set of nutdrivers.

To replace the LCD assembly, see *Figure 7-11*, and proceed as follows:

1. Disconnect the infuser from AC power.
2. Separate the front and rear case assemblies as described in *Section 7.2.3*.
3. Disconnect the LCD ribbon cable from J15 on the CPU/display PWA
4. Remove the power supply PWA as described in *Section 7.3.11*.
5. Remove the CPU/display PWA as described in *Section 7.3.12*.
6. Pull the adhesive-backed plastic insulator from the LCD window.

7. Using a No. 0 Phillips screwdriver, remove the screws from each corner of the LCD assembly.
8. Grasp the CPU/display PWA and carefully remove the LCD from the connector J14 socket. Do not bend the connector pins.
9. Mount the adhesive-backed plastic insulator on the replacement LCD. Center the insulator window on the LCD so the insulator covers the edges of the metal bracket.
10. Reinstall the LCD assembly, power supply PWA, and CPU/display PWA.
11. Reassemble the infuser in the exact reverse order of disassembly.
12. Close and lock the security door.

To verify successful replacement of the LCD assembly, perform the PVT in *Section 5.2*.

7.3.14
40 PIN RIBBON CABLE REPLACEMENT

Recommended tools for this procedure are a No. 2 Phillips screwdriver, set of nutdrivers, 1/4 open end wrench, and set of Allen wrenches.

To replace the 40 pin ribbon cable, see *Figure 7-14*, and proceed as follows:

1. Disconnect the infuser from AC power.
2. Separate the front and rear case assemblies as described in *Section 7.2.3*.
3. Remove the power supply PWA as described in *Section 7.3.11*.
4. Remove the CPU/display PWA as described in *Section 7.3.12*.
5. Remove the 40 pin ribbon cable from J7 on the power supply PWA and J12 on the CPU/display PWA.
6. Install the replacement 40 pin ribbon cable. Connectors are keyed for pin 1.
7. Reinstall the power supply PWA and the CPU/display PWA.
8. Reassemble the infuser in the exact reverse order of disassembly.
9. Close and lock the security door.

To verify successful replacement of the 40 pin ribbon cable, perform the PVT in *Section 5.2*.

7.3.15
15 CONDUCTOR DIAGNOSTIC CABLE REPLACEMENT

Recommended tools for this procedure are a No. 2 Phillips screwdriver, flat blade screwdriver, set of nutdrivers, 1/4 open end wrench, and set of Allen wrenches.

To replace the 15 conductor diagnostic cable, see *Figure 7-15*, and proceed as follows:

1. Disconnect the infuser from AC power.
2. Separate the front and rear case assemblies as described in *Section 7.2.3*.
3. Disconnect the diagnostic cable from J9 on the power supply PWA.
4. Using a 3/16 nutdriver and a flat blade screwdriver, remove the two screws and nuts that retain the diagnostic connector on the transformer/receptacle assembly.
5. Disconnect the cable from the diagnostic connector and remove the cable from the adhesive pad above the AC power connector next to the battery case. Remove and inspect the adhesive pad and replace, if required.
6. Press the connector on the replacement cable into place on the diagnostic connector. Do not bend the connector pins. Snap the retainer clip into position on the diagnostic connector.
7. Fold the cable 90 degrees and press it onto the adhesive pads to assure clearance of the slide assembly during reassembly.
8. Reassemble the infuser in the exact reverse order of disassembly, and close and lock the security door.

To verify successful replacement of the 15 conductor diagnostic cable, perform the PVT in *Section 5.2*.

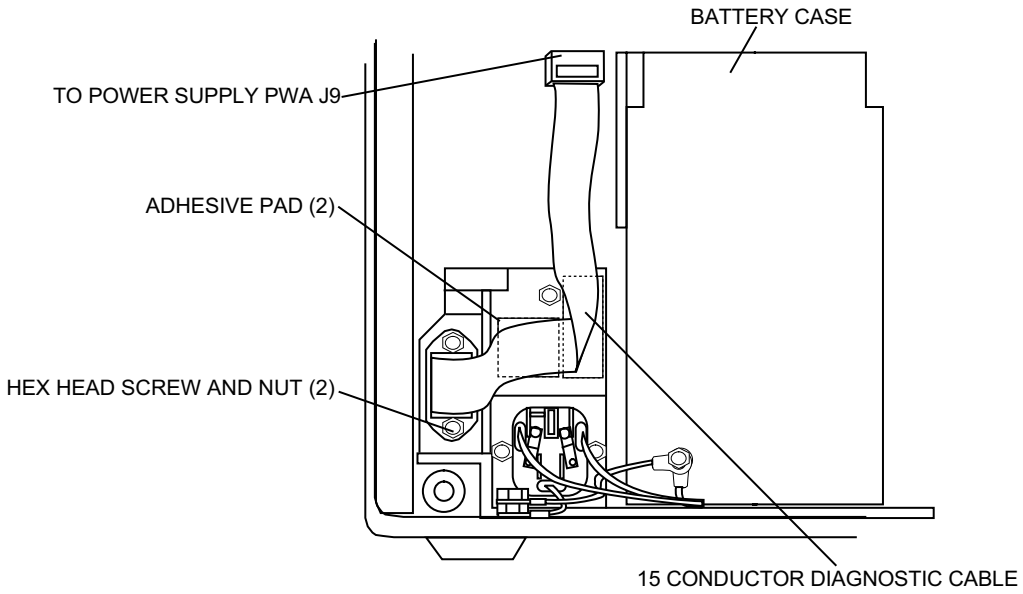

Figure 7-15. 15 Conductor Diagnostic Cable

7.3.16
CRADLE ASSEMBLY REPLACEMENT

There are two versions of the cradle assembly, Type A and Type B *(see Figure 7-16)*.

The recommended tool for this procedure is a 5/64 inch Allen wrench or No. 2 Phillips screwdriver.

To replace the cradle assembly, see *Figure 7-16*, and proceed as follows:

1. Disconnect the infuser from AC power.
2. Open the security door, then place the infuser face up on a soft surface.
3. Using the 5/64 Allen wrench or Phillips screwdriver, remove the two screws that secure the cradle assembly, then remove the cradle assembly.

   Note: Infusers -010 and higher are configured with Phillips screws.

4. Install the replacement cradle assembly using the screws removed in Step 4.
5. Close and lock the security door.

To verify successful replacement of the cradle assembly, perform the PVT in *Section 5.2*.

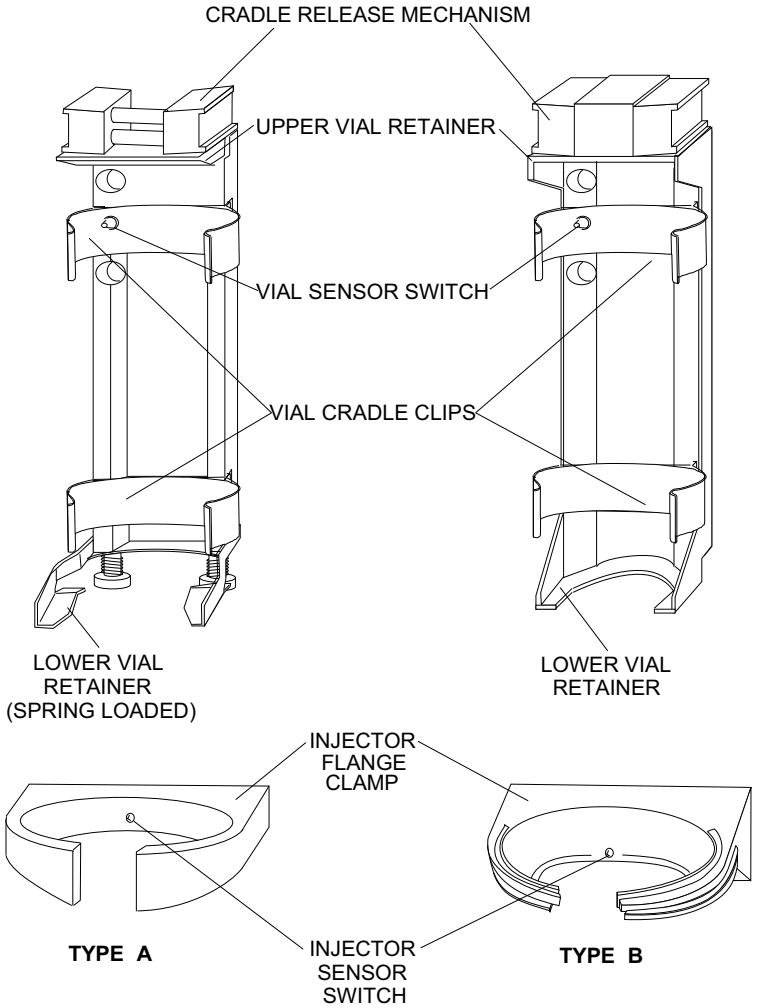

Figure 7-16. Cradle Assembly Replacement

7.3.17
VIAL SENSOR SWITCH REPLACEMENT

Recommended tools for this procedure are a No. 2 Phillips screwdriver, set of nutdrivers, soldering iron, and solder.

To replace the vial sensor switch, see *Figure 7-4* or *Figure 7-5*, and *Figure 7-17*, and proceed as follows:

1. Disconnect the infuser from AC power.
2. Separate the front and rear case assemblies as described in *Section 7.2.3*.
3. Place the front case assembly face down on a soft surface.
4. -008 and lower: Using a 3/16 nutdriver, remove the two vial sensor adjustment screws that attach the vial sensor switch bracket and switch to the slide assembly.
5. Using a Phillips screwdriver, remove the screw that attaches the vial sensor switch cradle clip to the slide assembly.
6. Unsolder the two wires from the vial sensor switch.
7. Solder wires to the replacement switch as follows:
   - red wire to lower switch terminal (common)
   - white wire to center (N/O) terminal.
8. Replace the cradle clip removed in Step 5.
9. Install the replacement vial sensor switch. Mount the switch using the two screws that were removed in Step 4.
10. -008 and lower: Mount the switch bracket to the slide assembly.
11. Adjust the vial sensor switch as described in *Section 7.2.5*, as applicable.
12. Reassemble the infuser in the exact reverse order of disassembly.
13. Close and lock the security door.

To verify replacement of the vial sensor switch, perform the PVT in *Section 5.2*.

7.3.18
SLIDE CLAMP KNOB AND LEVER REPLACEMENT (-008 AND LOWER)

Recommended tools for this procedure are a 3/32 Allen wrench, No. 2 Phillips screwdriver, and set of nutdrivers.

To replace the slide clamp knob and lever, see *Figure 7-17*, and proceed as follows:

1. Disconnect the infuser from AC power.
2. Separate the front and rear case assemblies as described in *Section 7.2.3*.
3. Move the cradle to the top of its travel path. Using a 3/32 inch Allen wrench, remove the two Allen screws and lock washers that secure the lever of the left slide clamp knob.

   Note: Infusers with final assembly numbers -010 and higher do not contain slide clamp handle Allen screws.

4. Remove the two Allen screws and lock washers that secure the lever of the right slide clamp knob. Press the two knobs together and remove them.
5. Slowly release the tension of the springs between the slide clamp knobs. Note the configuration of the spring assembly (two per handle) and spring retainer sleeves.
6. Install the spring and spring retainer in the replacement knob.
7. Press the knobs together and reinstall.
8. Reassemble the infuser case assemblies in the exact reverse order of disassembly.
9. Close and lock the security door.

To verify successful replacement of the slide clamp knob and lever, perform the PVT in *Section 5.2*.

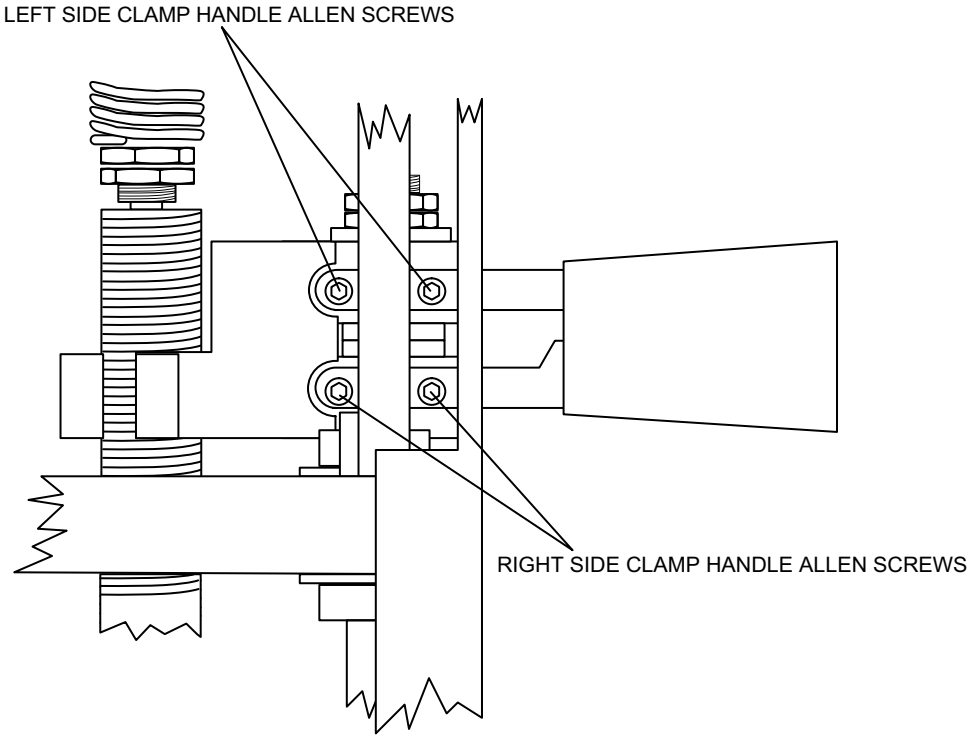

Figure 7-17. Location of Slide Clamp Handle Allen Screws (-008 and Lower)

7.3.19
SLIDE CLAMP LEVER REPLACEMENT (-010 AND HIGHER)

Recommended tools for this procedure are a No. 2 Phillips screwdriver and set of nutdrivers.

To replace the slide clamp levers, proceed as follows:

1. Disconnect the infuser from AC power.
2. Separate the front and rear case assemblies as described in *Section 7.2.3*.
3. Remove the cradle assembly as described in *Section 7.3.16*.
4. Lift the slide clamp lever off the pivot post and pull through the front of the infuser.
5. Install the replacement slide clamp lever.
6. Reinstall the cradle assembly.
7. Reassemble the infuser in the exact reverse order of disassembly.
8. Close and lock the security door.

To verify successful replacement of the slide clamp lever, perform the PVT in *Section 5.2*.

7.3.20
SYRINGE LOW AND SYRINGE EMPTY SWITCH REPLACEMENT

The syringe low switch is functional only on PCA Plus Series infusers and does not require replacement on PCA Plus II Series infusers.

Recommended tools for this procedure are a small flat blade screwdriver, No. 2 Phillips screwdriver, set of nutdrivers, soldering iron, solder, and small cable tie.

To replace the syringe low or syringe empty switch, proceed as follows:

1. Disconnect the infuser from AC power.
2. Separate the front and rear case assemblies as described in *Section 7.2.3*.
3. Place the front case assembly face down on a soft surface.
4. -008 and lower: Using a 1/4 nutdriver or a standard screwdriver, remove the two screws from the switch mounting bracket. Remove the switch mounting bracket.
5. Using a small flat blade screwdriver and 1/4 nutdriver, remove the two screws that attach the switches to the mounting bracket.
6. Cut and remove the cable tie that secures the switch wires to the wiring harness, and unsolder the wires from the switch.

   ✎ **Note:** The syringe low switch is mounted next to the mounting bracket, and the syringe empty switch is mounted on top of the syringe low switch.

7. Solder the wires to the replacement switch as follows:
   - black wire (common) to the center terminal of both switches
   - yellow wire to the top terminal of the syringe low switch
   - green wire to the top terminal of the syringe empty switch
8. -008 and lower: Reinstall the switches on the switch mounting bracket. Note the two flat washers between the switches.
9. Reattach the switch mounting bracket (-008 and lower) or switch (-010 and higher) to the slide assembly.
10. Secure the switch wires to the wiring harness with a small cable tie.
11. Adjust the syringe low switch as described in *Section 7.2.6*, as required.
12. Adjust the syringe empty switch as described in *Section 7.2.7*, as required.
13. Reassemble the infuser case assemblies in the exact reverse order of disassembly.
14. Close and lock the security door.

To verify successful replacement of the syringe low and syringe empty switch, perform the PVT in *Section 5.2*.

7.3.21
OCCLUSION PRESSURE SWITCH REPLACEMENT

Recommended tools for this procedure are a small flat blade screwdriver, No. 2 Phillips screwdriver, set of nutdrivers, soldering iron, solder, and small cable tie.

To replace the occlusion pressure switch, proceed as follows:

1. Disconnect the infuser from AC power.
2. Separate the front and rear case assemblies as described in *Section 7.2.3*.
3. Place the front case assembly face down on a soft surface.
4. Cut the cable tie on the three wires connected to the occlusion pressure switch, and unsolder the wires from the switch terminals.
5. Using a small flat blade screwdriver, remove the two screws that attach the occlusion switch to the lower end of the slide assembly, then remove the switch.
6. Install the replacement switch using the screws removed in Step 5.
7. -008 and lower: Solder the wires to the replacement switch as follows:
   - orange wire to front terminal
   - black wire (common) to center terminal
   - blue wire to front terminal
8. -010 and higher: Solder the wires to the replacement switch as follows:
   - orange wire to front terminal
   - blue wire (common) to center terminal
   - black wire to front terminal

9. Place a small cable tie around the switch wires.
10. Perform the occlusion alarm switch test and adjustment procedure in *Section 7.2.8*, as applicable.
11. Reassemble the infuser case assemblies in the exact reverse order of disassembly.
12. Close and lock the security door.

To verify successful replacement of the occlusion pressure switch, perform the PVT in *Section 5.2*.

7.3.22
INJECTOR SENSOR SWITCH REPLACEMENT

Recommended tools for this procedure are a No. 2 Phillips screwdriver, set of nutdrivers, soldering iron, and solder.

To replace the injector sensor switch, proceed as follows:

1. Disconnect the infuser from AC power.
2. Separate the front and rear case assemblies as described in *Section 7.2.3*.
3. Place the front case assembly face down on a soft surface.
4. Using a 3/16 nutdriver, remove the two switch mounting screws that attach the injector sensor switch bracket (as applicable) and switch to the injector flange clamp. Remove the injector sensor switch.

   ✎ **Note:** Some infusers do not contain an injector sensor switch bracket.

5. Unsolder the wires from the injector sensor switch terminals.
6. Solder the wires to replacement injector sensor switch as follows:
   - two black wires to center terminal
   - brown wire to outside switch terminal
7. Mount the injector sensor switch and switch bracket (as applicable) to the injector flange clamp using the screws that were removed in Step 4.
8. Adjust the injector sensor switch as described in *Section 7.2.4*.
9. Reassemble the infuser in the exact reverse order of disassembly.
10. Close and lock the security door.

To verify successful replacement of the injector sensor switch, perform the PVT in *Section 5.2*.

7.3.23
MOTOR ASSEMBLY REPLACEMENT (-008 AND LOWER)

Recommended tools for this procedure are a 7/64 Allen wrench, No. 2 Phillips screwdriver, and set of nutdrivers.

To replace the motor assembly, see *Figure 7-18*, and proceed as follows:

1. Disconnect the infuser from AC power.
2. Separate the front and rear case assemblies as described in *Section 7.2.3*.
3. Remove the slide clamp knobs/levers as described in *Section 7.3.18*.
4. Remove the cradle assembly as described in *Section 7.3.16*.
5. Remove the slide assembly as described in *Section 7.3.25*.
6. Remove the two 7/64 Allen screws that attach the motor gear case to the slide assembly, then remove motor assembly.

   Note: A coupling tube and a coupling clip come off with the motor assembly.

7. Place the coupling clip inside the coupling tube and install both parts on the motor gear case shaft.
8. Line up the flats of the lead screw and the motor gear case shafts. Press the motor assembly onto the lead screw shaft. If necessary, move the motor assembly from side to side until the coupling pin engages the flats of the lead screw and motor gear case shafts. When the motor assembly is flush against the bottom of the slide, align the motor gear case holes with the holes tapped in the bottom of the slide.
9. Reinstall the two screws that were removed in Step 6.
10. Reassemble the infuser in the exact reverse order of disassembly.
11. Close and lock the security door.

To verify successful replacement of the motor assembly, perform the PVT in *Section 5.2*.

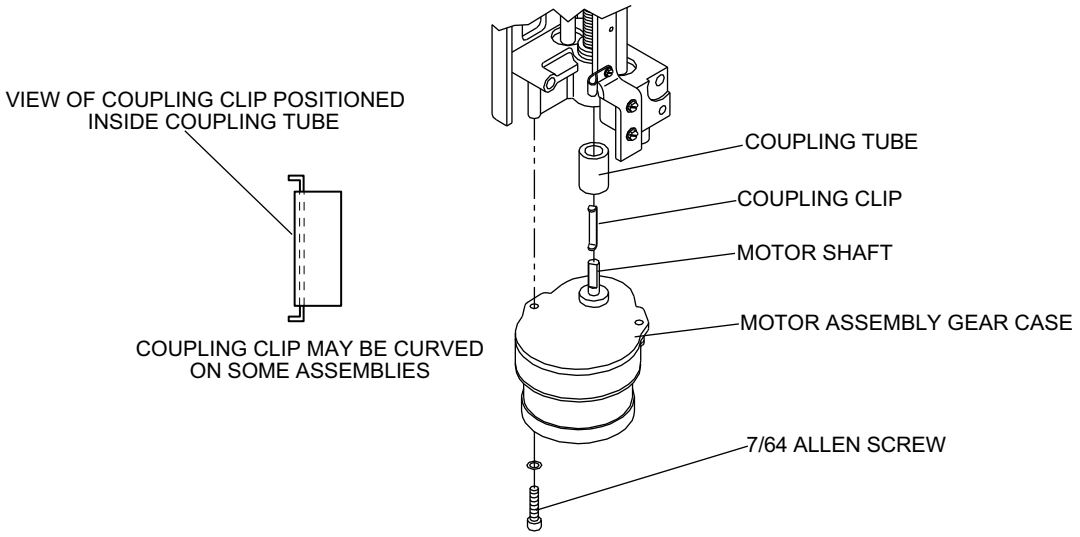

Figure 7-18. Motor Assembly Replacement (-008 and Lower)

7.3.24
MOTOR ASSEMBLY REPLACEMENT (-010 AND HIGHER)

Recommended tools for this procedure are a 7/64 Allen wrench, No. 2 Phillips screwdriver, and set of nutdrivers.

To replace the motor assembly, see *Figure 7-19*, and proceed as follows:

1. Disconnect the infuser from AC power.
2. Separate the front and rear case assemblies as described in *Section 7.2.3*.
3. Remove the slide clamp levers as described in *Section 7.3.19*.
4. Remove the cradle assembly as described in *Section 7.3.16*.
5. Disconnect the connectors from the power supply PWA and CPU/display PWA.
6. Using a 5/16 nutdriver, remove the three screws that attach the slide assembly to the front case *(see Figure 7-20)*.
7. Lift the slide assembly from the front case and carefully place it on its right side on a soft surface.

   ✎ **Note:** Do not damage the vial switch plunger that protrudes from the slide assembly, and do not damage the injector switch wires that remain attached.

8. Remove the two 6-32 screws and nuts that secure the motor assembly to the motor support.
9. Remove the motor assembly and coupler.
10. Install the replacement motor assembly in the slide assembly with the coupler. Replace the coupler, if required.
11. Reassemble the infuser in the exact reverse order of disassembly.
12. Close and lock the security door.

To verify successful replacement of the motor assembly, perform the PVT in *Section 5.2*.

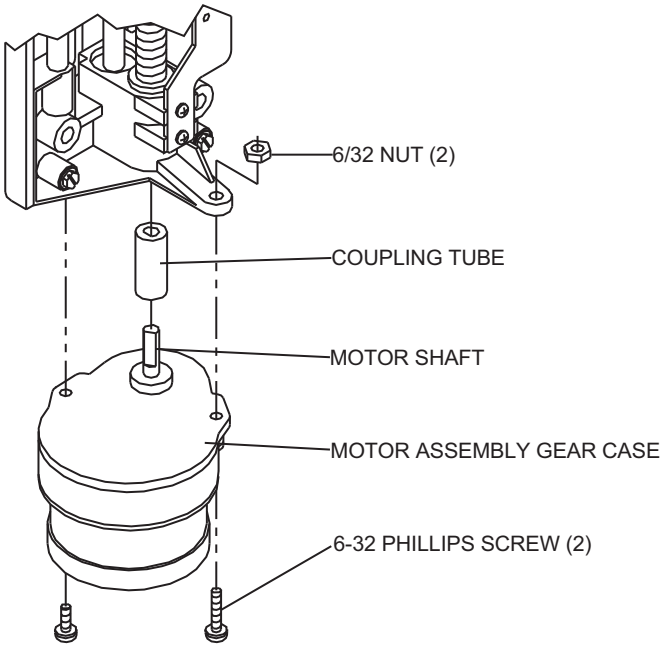

Figure 7-19. Motor Assembly Replacement (-010 and Higher)

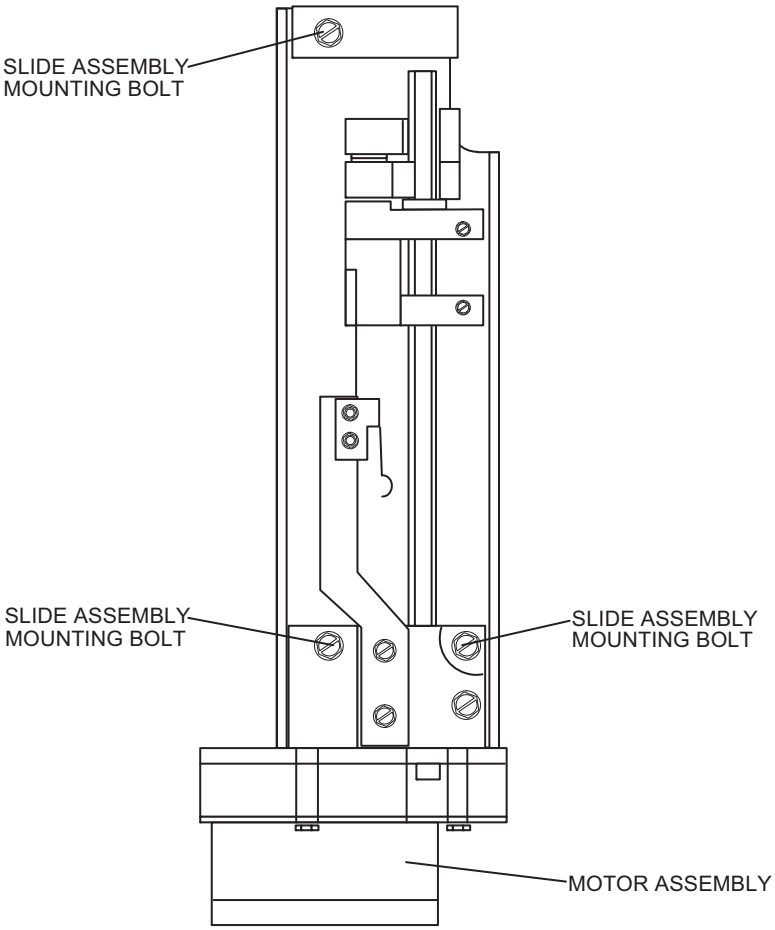

Figure 7-20. Location of Slide Assembly Mounting Bolts

7.3.25
SLIDE ASSEMBLY REPLACEMENT (-008 AND LOWER)

Recommended tools for this procedure are a 9/64 Allen wrench, No. 2 Phillips screwdriver, set of nutdrivers, and grease.

To replace the slide assembly, see *Figure 7-20*, then proceed as follows:

1. Disconnect the infuser from AC power.
2. Separate the front and rear case assemblies as described in *Section 7.2.3*.
3. Remove the following components using the procedures described in their corresponding sections:
   - Slide clamp knobs and levers - *Section 7.3.18*
   - Cradle assembly - *Section 7.3.16*
   - Vial sensor switch - *Section 7.3.17*
   - Syringe low and syringe empty switches - *Section 7.3.20*
   - Occlusion pressure switch - *Section 7.3.21*
4. Using a 5/16 nutdriver, remove the three bolts that attach the slide assembly to the front case.
5. Lift the slide assembly from the front case and carefully place it on its right side on a soft surface. Do not damage the vial switch that protrudes from the slide assembly.
6. Remove the injector sensor switch as described in *Section 7.3.22*.
7. Remove the plastic cable clamp from the slide assembly, then remove the switch wiring harness.
8. Remove the motor assembly from the slide assembly as described in *Section 7.3.23*.
9. Mount the motor assembly on the replacement slide assembly.
10. Replace the injector sensor switch removed in Step 6.
11. Using the three bolts that were removed in Step 4, mount the replacement slide assembly on the front case. Lubricate the lead screw with grease.
12. Reinstall the occlusion pressure switch, syringe low switch, syringe empty switch, and vial sensor switch in the exact reverse order of disassembly.
13. Reattach the plastic cable clamp that was removed in Step 7 on the replacement slide assembly.
14. Reinstall the cradle assembly and the slide clamp knobs and levers in the exact reverse order of disassembly.
15. Adjust the following switches using the procedures described in their corresponding sections:
    - Injector sensor switch - *Section 7.2.4*
    - Vial sensor switch - *Section 7.2.5*
    - Syringe low switch (as applicable) - *Section 7.2.6*
    - Syringe empty switch - *Section 7.2.7*
    - Occlusion pressure switch - *Section 7.2.8.2*

16. Reassemble the infuser case assemblies in the exact reverse order of disassembly.
17. Close and lock the security door.

To verify successful replacement of the slide assembly, perform the PVT in *Section 5.2*.

7.3.26
SLIDE ASSEMBLY REPLACEMENT (-010 AND HIGHER)

Recommended tools for this procedure are a 9/64 Allen wrench, set of Phillips screwdrivers, set of nutdrivers, and grease.

To replace the slide assembly, see *Figure 7-20*, and proceed as follows:

1. Disconnect the infuser from AC power.
2. Separate the front and rear case assemblies as described in *Section 7.2.3*.
3. Remove the cradle assembly as described in *Section 7.3.16*.
4. Remove the slide clamp levers as described in *Section 7.3.19*.
5. Using a No. 1 Phillips screwdriver and a 1/8 nutdriver, remove the two wire harnesses that contain the occlusion pressure switch, vial sensor switch, injector sensor switch, and empty vial/syringe switch. Mark P/J numbers on the connectors prior to removing. Cut the cable ties to remove the harnesses, if necessary.
6. Using a 5/16 nutdriver, remove the three screws that attach the slide assembly to the front case.
7. Lift the slide assembly out of the front case and carefully place it on its right side on a soft surface. Do not damage the vial switch plunger that protrudes from the slide assembly.
8. Install the replacement slide assembly and replace the screws removed in Step 6. Lubricate the lead screw with grease.
9. Reinstall the wire harnesses in the exact reverse order of disassembly.
10. Reconnect the ribbon cables to the power supply PWA.
11. Replace the slide clamp knobs/levers that were removed in Step 4, if required.
12. Replace the cradle assembly that was removed in Step 3, if required.
13. Adjust the following switches using the procedures described in their corresponding sections:
    - Injector sensor switch - *Section 7.2.4*
    - Vial sensor switch - *Section 7.2.5*
    - Syringe low switch (as applicable) - *Section 7.2.6*
    - Syringe empty switch - *Section 7.2.7*
    - Occlusion pressure switch - *Section 7.2.8.3*
14. Reassemble the case assemblies in the exact reverse order of disassembly.
15. Close and lock the security door.

To verify successful replacement of the slide assembly, perform the PVT in *Section 5.2*.

7.3.27
INJECTOR FLANGE CLAMP REPLACEMENT

Two configurations of injector flange clamps are used, depending on the final assembly number of the infuser. This procedure may be followed for both configurations.

Recommended tools for this procedure are a No. 2 Phillips screwdriver, and set of nutdrivers.

To replace the injector flange clamp, see *Figure 7-16*, and proceed as follows:

1. Disconnect the infuser from AC power.
2. Separate the front and rear case assemblies as described in *Section 7.2.3*.
3. Place the front case assembly face down on a soft surface.
4. Remove the slide assembly as described in *Section 7.3.25* or *Section 7.3.26*.
5. Using a 3/16 nutdriver, remove the two switch mounting screws that attach the injector sensor switch bracket (as applicable) and switch to the slide assembly. Remove the injector sensor switch.

   ✎ **Note:** Some infusers do not contain an injector sensor switch bracket.

6. Using a 1/4 nutdriver, remove the screws that attach the injector flange clamp to the front case.
7. Mount the replacement injector flange clamp to the front case using the screws that were removed in Step 6.
8. Mount the injector sensor switch and switch bracket (as applicable) to the injector flange clamp using the screws that were removed in Step 5.
9. Reinstall the slide assembly as described in *Section 7.3.25* or *Section 7.3.26*.
10. Adjust the injector sensor switch as described in *Section 7.2.4*.
11. Reassemble the case assemblies in the exact reverse order of disassembly.
12. Close and lock the security door.

To verify successful replacement of the injector flange clamp, perform the PVT in *Section 5.2*.

7.3.28
PRINTER/DATAWAY CONNECTOR AND CONTROL PANEL HARNESS REPLACEMENT

Recommended tools for this procedure are a No. 2 Phillips screwdriver, set of nutdrivers, set of box wrenches, and small flat blade screwdriver.

To replace the printer/Dataway connector and control panel harness, see *Figure 7-21*, and proceed as follows:

1. Disconnect the infuser from AC power.
2. Separate the front and rear case assemblies as described in *Section 7.2.3*.
3. Place the infuser rear case assembly on a soft surface with interior facing up.
4. Disconnect the harness connector from J8 on the power supply PWA.

5. Pull the adhesive-backed cable tie clamp from the rear case. Cut and remove the cable tie that attaches the door lock switch wires to the rear case.
6. Using a small flat blade screwdriver and a 1/4 nutdriver, remove the two screws that attach the door lock switch to the door latch.
7. To ease disassembly and reassembly, remove the eight Phillips screws that attach the control panel to the rear case, the remove the control panel.
8. Using a small flat blade screwdriver and a 3/16 nutdriver, remove the two screws that attach the printer/Dataway connector (J10) to the control panel.
9. Using a 5/16 nutdriver, remove the nut that attaches the green wire to the control panel.
10. Using a 3/16 nutdriver, remove the screws that attach the piezoelectric alarm to the control panel. The longer of the two screws is used in the upper mounting hole to accommodate the plastic cable clip.
11. Using a 5/16 box wrench, remove the retainer nut that attaches the audible level switch to the control panel.
12. Using a 1/2 box wrench, remove the retainer nut that attaches the patient pendant jack to the control panel.
13. Remove the plastic cable clip that attaches the harness to the piezoelectric alarm mounting screw. Place the clip on the replacement harness in the same location.
14. Using a 1/2 box wrench, attach the patient pendant jack on the replacement harness to the control panel.
15. Using a 5/16 box wrench, attach the audible level switch on the replacement harness to the control panel.
16. Using a 5/16 box wrench, attach the piezoelectric alarm on the replacement harness to the control panel. Attach the harness clamp to the alarm with the longer mounting screw in the upper position.
17. Using a small flat blade screwdriver and a 3/16 nutdriver, attach the printer/Dataway connector (J10) on the replacement harness to the control panel.
18. Remount the control panel on the rear case with the eight Phillips screws that were removed in Step 7.
19. Using a 5/16 nutdriver, attach the green ground wire in the replacement harness to the control panel.
20. Replace the adhesive-backed cable tie clamp that was removed in Step 5. Use care to place it in the same location. Using the cable tie, secure the replacement harness to the clamp.
21. Connect connector P8 on the replacement harness to J8 on the power supply PWA.
22. Reassemble the case assemblies in the exact reverse order of disassembly.
23. Close and lock the security door.

To verify successful replacement of the printer/Dataway connector and control panel harness, perform the PVT in *Section 5.2*.

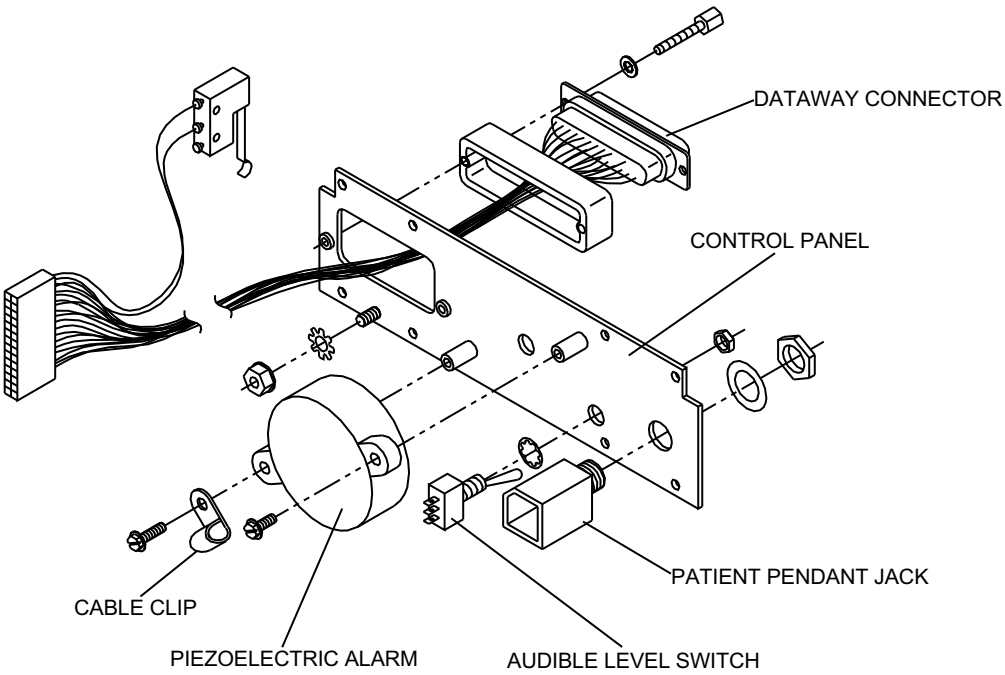

Figure 7-21.
Printer/Dataway Connector, Control Panel Harness, and Piezoelectric Alarm

7.3.29
PIEZOELECTRIC ALARM REPLACEMENT

This procedure applies to infusers with final assembly numbers 850-04250-002 through -007. Infusers with final assembly number 850-04250-008 and higher require replacement of the Interconnect PWA if the piezoelectric alarm is defective *(see Section 7.3.32)*.

Recommended tools for this procedure are a No. 2 Phillips screwdriver, set of nutdrivers, wire cutters, soldering iron, solder, 1/8 inch shrink tubing, and small cable wrap.

To replace the piezoelectric alarm, see *Figure 7-21*, and proceed as follows:

1. Disconnect the infuser from AC power.
2. Separate the front and rear case assemblies as described in *Section 7.2.3*.
3. Using a 3/16 nutdriver, remove the screws that attach the piezoelectric alarm to the control panel. The longer of the two screws is used in the upper mounting hole to accommodate the plastic cable clip.
4. Cut the cable tie nearest to the piezoelectric alarm on the wire harness. The piezoelectric alarm has a black wire and a red wire. The red wire connects to the gray wire on the wire harness. The black wire connects to the white wire on the wire harness. Remove the shrink wrap from the solder joints and unsolder the wires.
5. Remove the piezoelectric alarm.
6. Slip one inch of 1/8 inch shrink tubing over the gray and white wires on the wire harness.

7. Solder the red wire of the replacement piezoelectric alarm to the gray wire on the harness. Solder the black wire of the replacement piezoelectric alarm to the white wire on the harness.
8. Slip the shrink tubing over the solder joints and shrink into place.
9. Mount the piezoelectric alarm to the control panel with the screws that were removed in Step 3. Place the clamp around the harness wires routed to the rear of the printer connector on the control panel. Attach the plastic cable clip with the upper screw.
10. Install a new cable tie on the wire harness. Use care to place it in the same location.
11. Reassemble the case assemblies in the exact reverse order of disassembly.
12. Close and lock the security door.

To verify successful replacement of the piezoelectric alarm, perform the PVT in *Section 5.2*.

7.3.30
PATIENT PENDANT JACK REPLACEMENT

This procedure applies to infusers with final assembly numbers 850-04250-002 through -007. Infusers with final assembly number 850-04250-008 and higher require replacement of the Interconnect PWA if the patient pendant jack is defective *(see Section 7.3.32)*.

Recommended tools for this procedure are a No. 2 Phillips screwdriver, set of nutdrivers, 1/2 box wrench, soldering iron, and solder.

To replace the patient pendant jack, see *Figure 7-21*, and proceed as follows:

1. Disconnect the infuser from AC power.
2. Separate the front and rear case assemblies as described in *Section 7.2.3*.
3. Place the rear case assembly on a soft surface with the interior facing up. Remove the adhesive-backed cable tie clamp from the rear case.
4. Remove the eight Phillips screws that attach the control panel to the rear case, then remove the control panel.
5. Unsolder the harness wires from the patient pendant jack.
6. Using a 1/2 box wrench, remove the nut that attaches the patient pendant jack to the control panel, then remove the patient pendant jack.
7. Install the replacement patient pendant jack on the control panel. Using a 1/2 box wrench, secure the jack with the retaining nut.
8. Solder the wires from the harness to the patient pendant jack as follows:
   - white wire with red stripe to the ring terminal
   - white wire with green stripe to the tip terminal
9. Using a 1/2 box wrench, remove the retainer nut that attaches the patient pendant jack to the control panel.
10. Remount the control panel on the rear case with the eight Phillips screws removed in Step 4.

11. Replace the adhesive-backed cable tie clamp on the inside of the rear case. Use care to place it in the same location.
12. Reassemble the infuser case assemblies in the exact reverse order of disassembly.
13. Close and lock the security door.

To verify successful replacement of the patient pendant jack, perform the PVT in *Section 5.2*.

7.3.31
AUDIBLE LEVEL SWITCH REPLACEMENT

This procedure applies to infusers with final assembly numbers 850-04250-002 through -007. Infusers with final assembly number 850-04250-008 and higher require replacement of the Interconnect PWA if the audible level switch is defective *(see Section 7.3.32)*.

Recommended tools for this procedure are a No. 2 Phillips screwdriver, set of nutdrivers, soldering iron, and solder.

To replace the audible level switch, proceed as follows:

1. Disconnect the infuser from AC power.
2. Separate the front and rear case assemblies as described in *Section 7.2.3*.
3. Place the rear case assembly on a soft surface with the interior facing up. Remove the adhesive-backed cable tie clamp from the rear case.
4. Remove the eight Phillips screws that attach the control panel to the rear case, then remove the control panel.
5. Unsolder the harness wires from the audible level switch terminals.
6. Using a 5/16 nutdriver, remove the nut that attaches the audible level switch to the control panel.
7. Install the replacement audible level switch in the control panel. Using a 1/2 box wrench, secure the switch with the retaining nut.
8. Solder the wires from the harness to the audible level switch as follows:
   - white wire with orange stripe to the upper terminal
   - white wire with black stripe to the center terminal
   - white wire with brown stripe to the lower terminal
9. Remount the control panel on the rear case with the eight Phillips screws that were removed in Step 4.
10. Replace the adhesive-backed cable tie clamp on the inside of the rear case. Use care to place the clamp in the same location.
11. Reassemble the case assemblies in the exact reverse order of disassembly.
12. Close and lock the security door.

To verify successful replacement of the audible level switch, perform the PVT in *Section 5.2*.

7.3.32
INTERCONNECT PWA REPLACEMENT

This procedure applies to infusers with final assembly number 850-04250-008 and higher.

Recommended tools for this procedure are a No. 2 Phillips screwdriver, set of nutdrivers, wire cutters, wire strippers, soldering iron, solder, and approximately one inch of 1/8 inch shrink tubing.

To replace the interconnect PWA, see *Figure 7-22*, and proceed as follows:

1. Disconnect the infuser from AC power.
2. Separate the front and rear case assemblies as described in *Section 7.2.3*.
3. Disconnect the interconnect PWA cable from J10, the interconnect PWA, and J8 on the power supply PWA.
4. Using a 5/16 nutdriver, remove the nut that attaches the green ground wire to the control panel.
5. Using wire cutters, cut the two wires that connect the door lock switch to the interconnect PWA. Cut the wires between the interconnect PWA and the cable clamps mounted to the rear case.
6. Remove the eight Phillips screws that attach the control panel and interconnect PWA to the rear case. Remove the control panel and interconnect PWA.
7. Install the replacement control panel and interconnect PWA using the eight Phillips screws that were removed in Step 6.
8. Using wire strippers, strip approximately 1/2 inch of insulation from the two wires that connect the door lock switch to the interconnect PWA.
9. Slip one inch of 1/8 inch shrink tubing over the door lock switch wires. Solder the wires to the corresponding wires on the interconnect PWA. Slip the shrink tubing over the solder joint and shrink in place.
10. Attach the green ground wire that was removed in Step 4.
11. Connect the interconnect PWA cable that was disconnected in Step 3.
12. Reassemble the case assemblies in the exact reverse order of disassembly.
13. Close and lock the security door.

To verify successful replacement of the interconnect PWA, perform the PVT in *Section 5.2*.

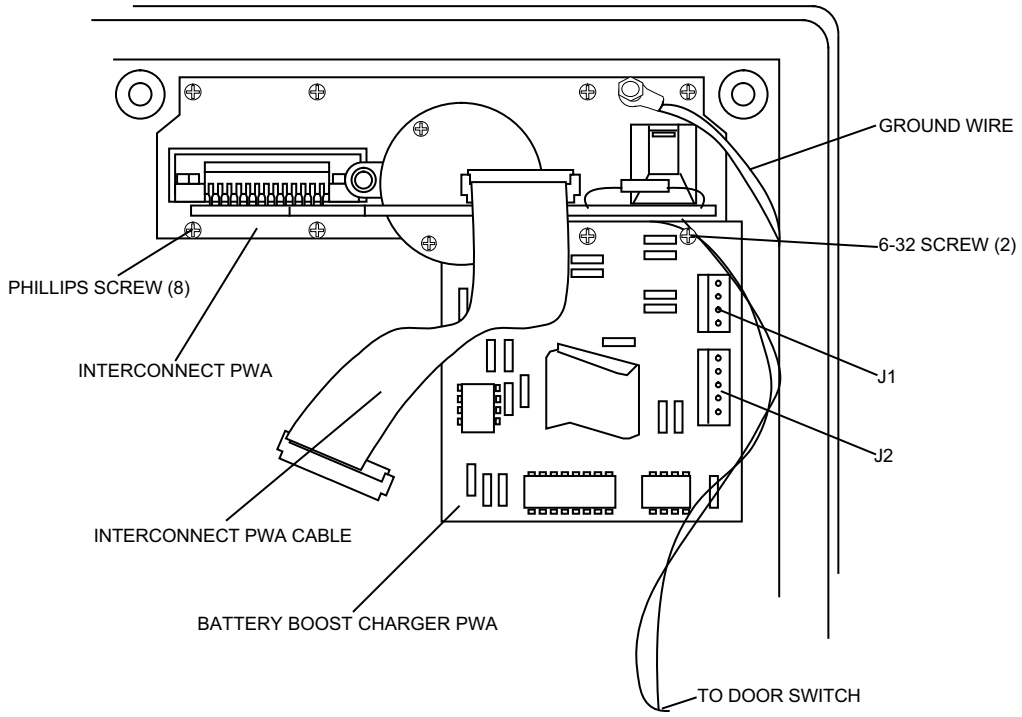

Figure 7-22. Interconnect PWA and Battery Boost Charger PWA Replacement

7.3.33
INTERCONNECT PWA CABLE REPLACEMENT

This procedure applies to infusers with final assembly number 850-04250-008 and higher.

The recommended tools for this procedure are a No. 2 Phillips screwdriver and set of nutdrivers.

To replace the interconnect PWA cable, see *Figure 7-22*, and proceed as follows:

1. Disconnect the infuser from AC power.
2. Separate the front and rear case assemblies as described in *Section 7.2.3*.
3. Disconnect the interconnect PWA cable from connector J10 on the interconnect PWA and from J8 on the power supply PWA.
4. Connect the replacement interconnect PWA cable to connectors J8 and J10.
5. Reassemble the infuser case assemblies in the exact reverse order of disassembly.
6. Close and lock the security door.

To verify successful replacement of the interconnect PWA cable, perform the PVT in *Section 5.2*.

7.3.34
BATTERY BOOST CHARGER PWA REPLACEMENT

Recommended tools for this procedure are a set of Phillips screwdrivers and set of nutdrivers.

To replace the battery boost charger PWA, see *Figure 7-22*, and proceed as follows:

1. Disconnect the infuser from AC power.
2. Separate the front and rear case assemblies as described in *Section 7.2.3*.
3. Disconnect P1 and P2 from J1 and J2 on the battery boost charger PWA.
4. Using a No. 1 Phillips screwdriver, remove the two 6-32 screws that secure the battery boost charger PWA on the control panel assembly. Remove the battery boost charger PWA.
5. Mount the replacement battery boost charger PWA on the control panel assembly with the screws that were removed in Step 4.
6. Reassemble the infuser case assemblies in the exact reverse order of disassembly.
7. Close and lock the security door.

To verify successful replacement of the battery boost charger PWA, perform the PVT in *Section 5.2*.

7.3.35
FRONT PANEL REPLACEMENT

Recommended tools for this procedure are a No. 2 Phillips screwdriver, set of nutdrivers, 1/4 open end wrench, set of Allen wrenches, X-acto knife, lint-free cloth, and isopropyl alcohol.

To replace the front panel, see *Figure 7-23*, and proceed as follows:

1. Disconnect the infuser from AC power.
2. Separate the front and rear case assemblies as described in *Section 7.2.3*.
3. Remove the power supply PWA as described in *Section 7.3.11*.
4. Remove the CPU/display PWA as described in *Section 7.3.12*.
5. Using a 1/4 nutdriver, remove the four screws that attach the front panel assembly to the front case. Remove the front panel assembly.
6. Using an X-acto knife, pry the front panel from the sub panel. Remove the adhesive from the sub panel with isopropyl alcohol.
7. Remove the protective backing from the replacement front panel, then place the replacement front panel over the sub panel. Assure the front panel is properly seated on the sub panel, then press it into place. Confirm that no air bubbles are trapped between the two surfaces and that the surfaces bond securely.
8. Reinstall the power supply PWA and the CPU/display PWA.
9. Reassemble the case assemblies in the exact reverse order of disassembly.
10. Close and lock the security door.

To verify successful replacement of the front panel, perform the PVT in *Section 5.2*.

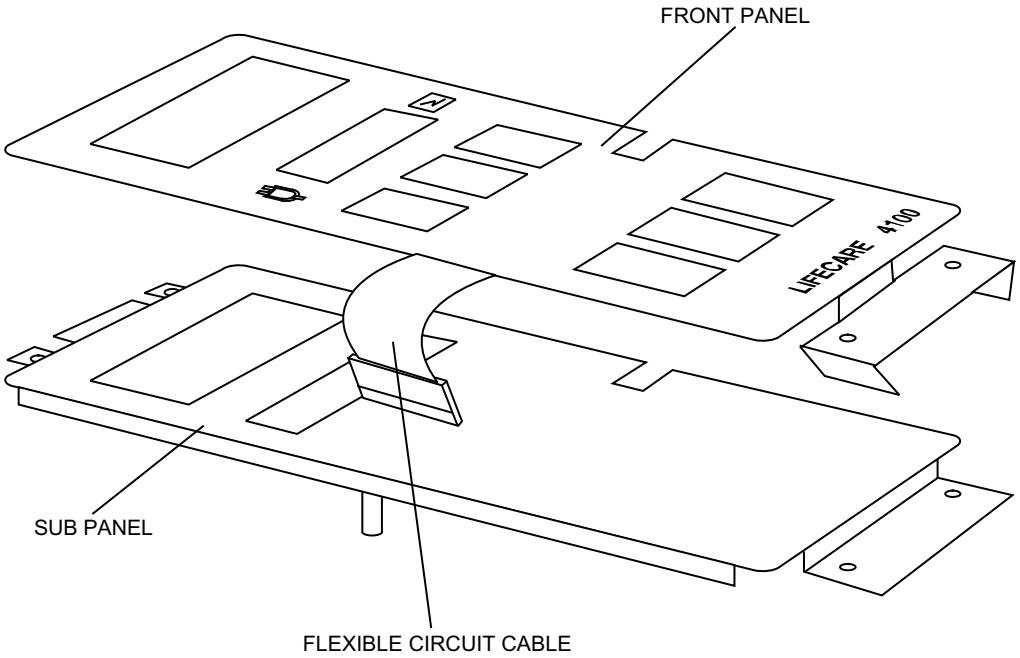

Figure 7-23. Front Panel Replacement

7.3.36
DOOR LOCK SWITCH REPLACEMENT

Recommended tools for this procedure are a No. 2 Phillips screwdriver, small flat blade screwdriver, 1/4 nutdriver, soldering iron, and solder.

To replace the door lock switch, see *Figure 7-24* or *Figure 7-25*, and proceed as follows:

1. Disconnect the infuser from AC power.
2. Separate the front and rear case assemblies as described in *Section 7.2.3*.
3. Using a small flat blade screwdriver and/or 1/4 nutdriver, remove the door lock switch from the door latch assembly.
4. Unsolder the wires from the door lock switch.
5. Mount the replacement door lock switch onto the door latch assembly.
6. Solder the wires to the terminal of the replacement door lock switch as follows:
   - white wire with green and brown stripes to the center terminal
   - white wire with blue and brown stripes to the rear terminal
7. Reassemble the infuser case assemblies in the exact reverse order of disassembly.
8. Close and lock the security door.

To verify successful replacement of the door lock switch, perform the PVT in *Section 5.2*.

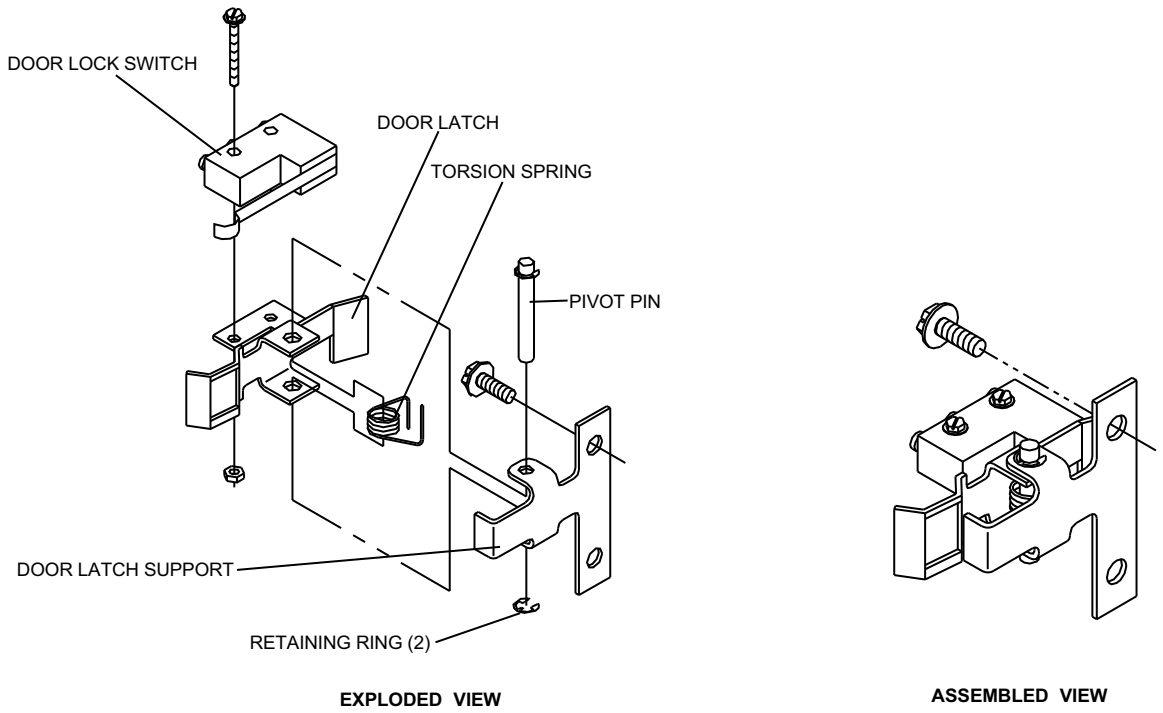

Figure 7-24. Door Latch Assembly (Type A)

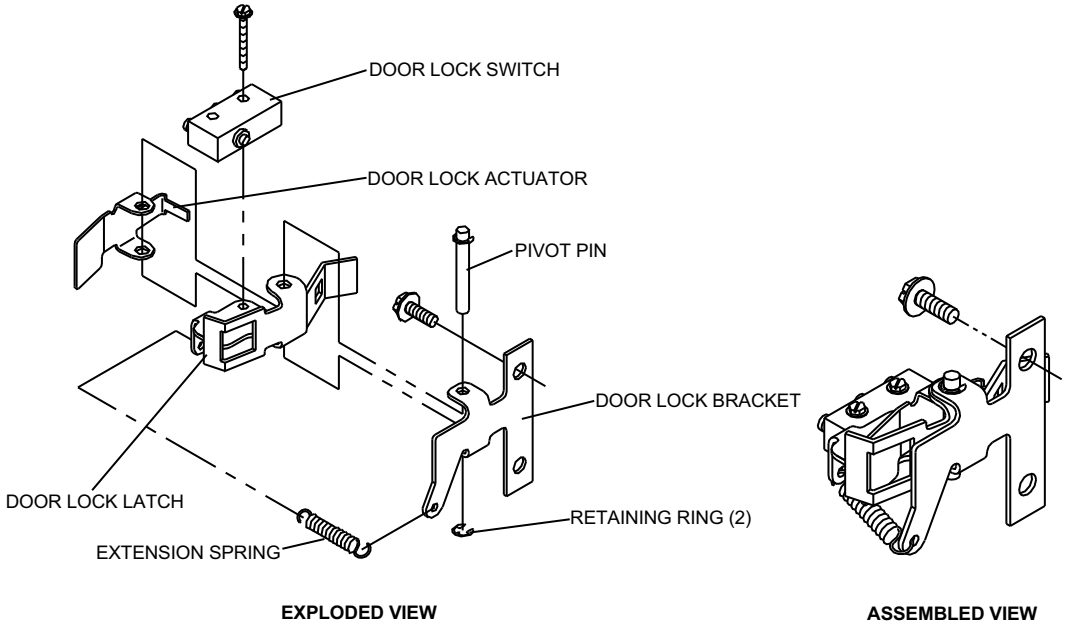

Figure 7-25. Door Latch Assembly (Type B)

7.3.37
DOOR LOCK ASSEMBLY REPLACEMENT

Recommended tools for this procedure are a No. 2 Phillips screwdriver, small flat blade screwdriver, set of nutdrivers, 7/16 box wrench, and 7/8 open end wrench.

To replace the door lock assembly, see *Figure 7-26*, and proceed as follows:

1. Disconnect the infuser from AC power.
2. Separate the front and rear case assemblies as described in *Section 7.2.3*.
3. Remove the door lock switch from the door lock assembly as described in *Section 7.3.36*.
4. Using a 7/16 box wrench, remove the nut from the end of the door lock cylinder. Remove the lock washer, the door latch pawl, and the locking washer.
5. Using a 7/8 open end wrench, remove the retainer nut that attaches the lock cylinder to the door lock assembly. Remove the lock cylinder, then remove the door lock assembly from the rear case.
6. Install the new door lock cylinder into the double-D hole in the cover and door lock assembly. Confirm the keyway slot is in the upward (12 o'clock) position.
7. Assemble the retainer nut on the door lock cylinder and tighten it against the door lock assembly. Replace the locking washer, latch pawl, lock washer, and nut on the door lock cylinder. Confirm the latch pawl hook is in the upward position.
8. Attach the replacement door lock assembly to the rear case in the exact reverse order of disassembly.
9. Reassemble the case assemblies in the exact reverse order of disassembly.
10. Close and lock the security door.

To verify successful replacement of the door lock assembly, perform the PVT in *Section 5.2*.

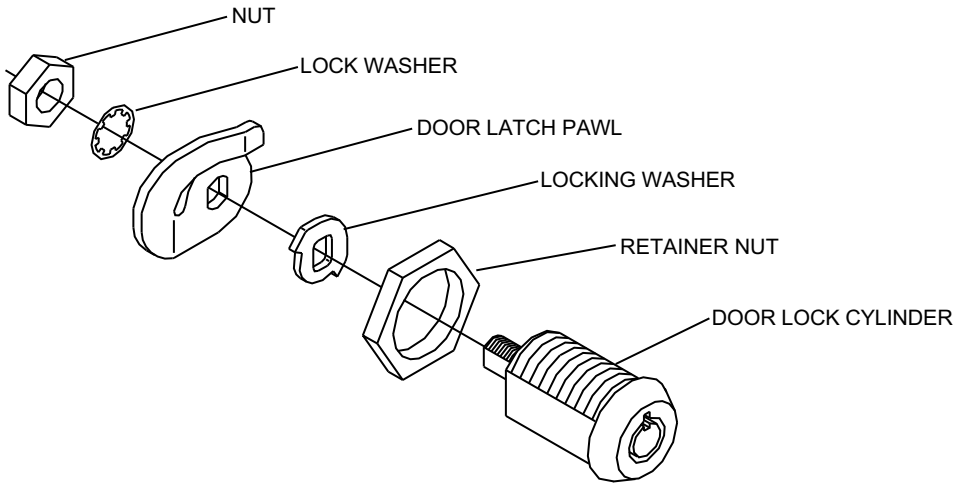

Figure 7-26. Door Lock Assembly

7.3.38
CHANGING THE KEY NUMBER

Note: This procedure is applicable only to locks with the numbers 1 through 8 engraved on the lock face.

Recommended tools for this procedure are a master key (black), and keys numbered 2 through 8.

To change a key number, proceed as follows:

1. Remove the door lock cylinder as described in *Section 7.3.37*.
2. Completely insert the master key (black) into the keylock assembly at position 1. Confirm the longer wing of the master key is positioned upward (12 o'clock).
3. Turn the master key clockwise to the new key number position.
4. Remove the master key from the keylock assembly.
5. Completely insert the new position combination key into the keylock assembly. Confirm an audible click sounds.
6. To confirm the keylock is set correctly, insert the key and lock, then unlock the security door.
7. If the key does not unlock the security door, reinsert the master key into the keylock with the longer wing positioned at the new key number position.
8. Turn the master key counterclockwise to position 1. Repeat Steps 3 through 5.
9. Tag the PCA infuser with the new key number.
10. Reassemble the infuser in the exact reverse order of disassembly, then perform the PVT in *Section 5.2*.

7.3.39
DOOR LATCH ASSEMBLY REPLACEMENT

Recommended tools for this procedure are a No. 2 Phillips screwdriver, small flat blade screwdriver, set of nutdrivers, 7/16 box wrench, and 7/8 open end wrench.

To replace the door latch assembly, proceed as follows:

1. Disconnect the infuser from AC power.
2. Separate the front and rear case assemblies as described in *Section 7.2.3*.
3. Using a small flat blade screwdriver and/or 1/4 nutdriver, remove the door lock switch from the door latch assembly.
4. Make sure the key is in the upward (12 o'clock) position, then remove the two 1/4 inch screws that attach the door latch and door latch spacer (as applicable) to the support plate. Remove the door latch assembly.
5. For type B locks only, remove the extension spring from the door lock bracket and latch *(see Figure 7-24)*.

6. Remove the retaining ring from the pivot pin. Remove the pivot pin, torsion spring (type A locks only), and the door lock actuator.
7. Reassemble the door latch assembly in the exact reverse order of disassembly. For type A locks, make certain the torsion spring is compressed, as shown in *Figure 7-27*, before replacing the pivot pin.
8. Reinstall the door lock switch and reassemble the infuser in the exact reverse order of disassembly.
9. Close and lock the security door.

To verify successful installation of the door latch assembly, perform the PVT in *Section 5.2*.

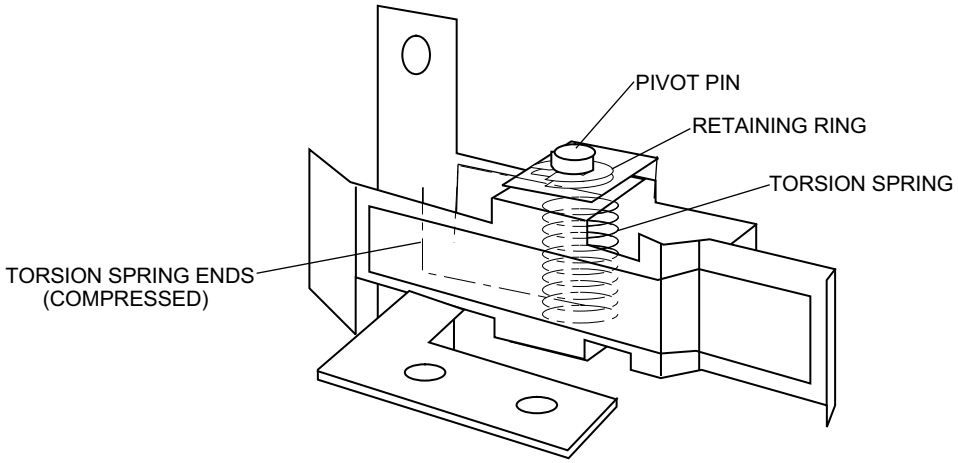

Figure 7-27. Door Latch Torsion Spring Placement (Type A)

7.3.40
REAR CASE ASSEMBLY REPLACEMENT

Note: The infuser serial number is required when ordering a new rear case. The serial number is located on the back of the infuser. Hospira will place a duplicate serial number label on the replacement rear case.

Recommended tools for this procedure are a No. 2 Phillips screwdriver, set of nutdrivers, set of box wrenches, and small flat blade screwdriver.

To replace the rear case assembly, proceed as follows:

1. Disconnect the infuser from AC power.
2. Verify that the serial number on the replacement rear case matches the serial number on the original rear case.
3. Separate the front and rear case assemblies as described in *Section 7.2.3*.
4. Remove the following components using the procedures described in their corresponding sections:
   - Battery and battery cover - *Section 7.3.3*
   - Pole clamp assembly - *Section 7.3.5*
   - Velcro strap and retainer plate - *Section 7.3.6*
   - Security door - *Section 7.3.7*
   - AC power cord - *Section 7.3.9*
   - Printer/Dataway connector and control panel harness - *Section 7.3.28*
   - Battery Boost charger PWA (if applicable) - *Section 7.3.34*
   - Door lock switch - *Section 7.3.36*
   - Door lock assembly - *Section 7.3.37*
5. Reassemble the rear case assembly in the exact reverse order of disassembly.
6. Reassemble the infuser in the exact reverse order of disassembly.
7. Close and lock the security door.

To verify successful replacement of the rear case assembly, perform the PVT in *Section 5.2*.

7.3.41
FRONT CASE ASSEMBLY REPLACEMENT

Recommended tools for this procedure are a 1/4 inch nutdriver and X-acto knife.

To replace the front case assembly, proceed as follows:

1. Remove the power supply PWA as described in *Section 7.3.11*
2. Remove the CPU/display PWA as described in *Section 7.3.12*.
3. Remove the slide assembly as described in *Section 7.3.25* or *Section 7.3.26*.
4. Using a 1/4 nutdriver, remove the four screws that attach the front panel assembly to the front case. Remove the front panel assembly and install onto the new case assembly.

5. Install the slide assembly into the new front case as described in *Section 7.3.25* or *Section 7.3.26*.
6. Reinstall the power supply PWA and the CPU/display PWA in the exact reverse order of disassembly.
7. Reassemble the infuser in the exact reverse order of disassembly.

To verify successful front case assembly replacement, perform the PVT in *Section 5.2*.

7.3.42
RUBBER FOOT PAD REPLACEMENT

Recommended tools for this procedure are a 3/8 inch wood chisel or X-acto knife, isopropyl alcohol, and cotton swabs.

To replace the rubber foot pad, see *Figure 7-12*, and proceed as follows:

1. Place the infuser on its side.
2. Using a 3/8 wood chisel or an X-acto knife, remove the rubber foot pad and scrape the enclosure recess to remove adhesive residue. Each adhesive-backed rubber foot pad is bonded in its recess. Do not damage the recess.
3. Using isopropyl alcohol, clean any adhesive residue from the enclosure recess.
4. Remove the protective backing from the self-adhesive surface of the replacement foot pad and press the pad in place.
5. After approximately five minutes, verify the foot pad is secure.

Replacement of a rubber foot pad is routine maintenance and no verification procedure is normally required. However, if the infuser may have been damaged during the replacement procedure, perform the PVT in *Section 5.2*.

Section 8

SPECIFICATIONS

8.1 PCA PLUS

Dimensions:	Approximately 8 in. W x 13 in. H x 6 in. D (excluding pole clamp and power cord)
Weight:	Approximately 15 lbs. with battery
Casing:	High density polyurethane structural foam
Power Requirements:	110 - 120 V; 50/60 Hz; 25 W
Power Cord:	Hospital-grade AC cord; 10 ft.
Fuses:	0.25 A, 250 V; Slo-Blo
Battery:	One sealed lead acid; rechargeable; 8 V; internal to the device
Battery Life:	A fully charged battery provides approximately four hours of operation with up to 30 mL of delivery
PCA Only Mode:	Approximately 1 mL in 35 seconds
Continuous Only Mode:	Variable from 0.5 x concentration to 20 x concentration (mg/hr)
PCA + Continuous:	Variable from 0.5 x concentration to 20 x concentration (mg/hr), plus PCA rate
Lockout Interval Range:	5 to 100 minutes in 1 minute increments
Backpressure Range:	10 to 20 psi
Operating Environment:	50° to 104° F (10° to 40° C) ambient temperature 5 - 95% relative humidity, non-condensing
Electrical Safety:	Meets UL, ANSI, and CSA standards
Administration Sets:	Use only compatible Hospira PCA sets with integral anti-siphon valve

8.2
PCA PLUS II

Dimensions:	Approximately 8 in. W x 13 in. H x 6 in. D (excluding pole clamp and power cord)
Weight:	Approximately 15 lbs. with battery
Casing:	High density polyurethane structural foam
Power Requirements:	110 - 120 V; 50/60 Hz; 25 W
Power Cord:	Hospital-grade AC cord; 10 ft.
Fuses:	0.25 A, 250 V; Slo-Blo
Battery:	One sealed lead acid; rechargeable; 8 V; internal to the device
Battery Life:	A fully charged battery provides approximately four hours of operation with up to 30 mL of delivery
PCA Only Mode:	Approximately 1 mL in 35 seconds
Continuous Only Mode:	Variable from 0.1 x concentration to 20 x concentration (mg/hr or g/hr))
PCA + Continuous:	Variable from 0.1 x concentration to 20 x concentration (mg/hr or g/hr), plus PCA rate
Lockout Interval Range:	5 to 100 minutes in 1 minute increments
Backpressure Range:	10 to 20 psi
Operating Environment:	50° to 104° F (10° to 40° C) ambient temperature
	5 - 95% relative humidity, non-condensing
Electrical Safety:	Meets UL, ANSI, and CSA standards
Administration Sets:	Use only compatible Hospira PCA sets with integral anti-siphon valve

Section 9

DRAWINGS

Figure 9-1 shows the Illustrated Parts Breakdown (IPB), and *Figure 9-2* is a block diagram for the infusion system *(see Table 9-1)*. *Table 9-2* identifies infuser parts by index numbers that correlate to *Figure 9-1*.

Drawings in *Section 9* are provided as information only, and may not exactly reflect current product configuration.

Table 9-1. Drawings

Figure Number	Title
9-1	Illustrated Parts Breakdown (16 Sheets)
9-2	Block Diagram

Table 9-2. Illustrated Parts Breakdown

Index Number	Nomenclature
1	Assembly, Mechanism
1A	Assembly, Gear Mot/Opto Switch
1B	Screw, 6-32 x 3/4, Pan Head, Phillips
1C	Screw, 2-56 x 7/16, Hex Head, w/Washer
1D	Nut, KEP, 6-32, w/Conical Washer
1E	Coupling, Mechanism
1F	Screw, 2-24 x 3/8, Pan Head, Plastic
1G	Screw, 2-56 x 7/16, Hex Head, w/Washer
2	Assembly, Slide
2A	Screw, 4-40 x 1/4, Hex Head, Slotted, w/Washer
2B	Actuator, Outside
2C	Actuator, Inside

Table 9-2. Illustrated Parts Breakdown	
Index Number	**Nomenclature**
2D	Actuator, Inside/Outside
2E	Washer, Flat, .94 x .25
2F	Nut, Hex, 2-56, Self-Locking
2G	Assembly, Gear Mot/Opto Switch
2H	Washer, Lock, Split, #6, .031 Thk.
2J	Screw, 2-56 x 1/2, Hex Head, w/Washer
2K	Screw, 2-56 x .50, Hex Head, w/Washer
2L	Washer, Lock, Split, #2, .020 Thk.
2M	Tube, Coupling
2N	Clip, Coupling
2P	Screw, Cap, 6-32 x 1/2, Socket Head
3	Assembly, Control Panel
3A	Washer, Lock, Split, .025 Thk.
3B	Standoff, Hex, .19 x .69, 4-40, M/F
3C	Panel, Control
3D	Jack, Phone
3E	Screw, 4-40 x 3/8, Hex Head, Slotted, w/Washer
3F	Clip, Cable, 1/4 in., #10 Bolt Hole
3G	Screw, 4-40 x 1/2, Hex Head, Slotted, w/Washer
4	Assembly, Control Panel
4A	Screw, 4-40 x 5/16, Hex Head, Slotted w/Washer
4B	Washer, Lock, #6, External Tooth
4C	Panel, Control
4D	PWA, Boost, Charger
4E	PWA, Interconnect
4F	Washer, Flat, .625, Fiber
4G	Assembly, Cable, 26 Conductor

Table 9-2. Illustrated Parts Breakdown	
Index Number	**Nomenclature**
5	Assembly, Door Lock
5A	Pawl, Latch, Door
5B	Ring, Retaining, .219 x .025 Thk.
5C	Washer, Flat, .253 x .050 Thk.
5D	Spring, Extension, Piggyback
5E	Pawl, Ratchet, Pole, Clip
5F	Plate, Door Lock
5G	Lock, Barrel
5H	Key, Modified
5J	Pin, Pivot, Door Latch
5K	Support, Latch
5L	Spring, Torsion, .025 Dia.
5M	Latch, Door
5N	Lock, Door, Bracket
5P	Spring, Extension
5Q	Latch, Door Lock
5R	Actuator, Door Lock
5S	Screw, 6-32 x 5/16, Hex Head, w/Washer
5T	Lock, Door, Latch, Pivot Pin
5U	Ring, Retaining, .125 x .015 Thk.
6	Insulator, LCD
7	Assembly, LCD
8	PWA, CPU
9	PWA, Power Supply
10	Assembly, Cable, 40 Conductor

Table 9-2. Illustrated Parts Breakdown	
Index Number	**Nomenclature**
11	Panel, Sub
12	Panel, Front
13	Case, Front
14	Assembly, Flange Clamp
15	Arm, Lever, Mechanism
16	Clip, Cradle
17	Cradle, Mechanism
18	Cradle, Vial
19	Support, Vial
20	Knob, Right
21	Knob, Left
22	Door, Front, Clear
23	Case, Rear
24	Gasket
25	Assembly, Battery, w/Wire Harness
26	Housing, Pole Clamp
27	Plunger, Pole Clamp
28	Assembly, Shaft/Knob
29	Retainer, AC Power Cord
30	Strap, Velcro Hook and Loop, Light Gray
31	Assembly, Switch, Pendant
32	Cordset, Hospital Grade, Detachable, 10 Ft.
33	Retainer, Power Cord
34	Cover, Battery
35	Pad, Foam, 1 in. W x 3 in. L x .375 Thk.
36	Foot, Case, Rubber

Table 9-2. Illustrated Parts Breakdown	
Index Number	**Nomenclature**
37	Assembly, Cable, D-Sub, 15 Conductor
38	Module, Power, 2 Pole, w/Ground
39	Fuse, .25 A, 250 V, Slo-Blo
40	Drawer, Fuse, 2 Pole
41	Screw, 4-24 x 3/8, Thread Cutting
42	Screw, 6-19 x 3/8, Pan Head, Phillips
43	Screw, Cap, 4-40 x .31, Socket Head, SS
44	Screw, 8-32 x 5/8, Pan Head, Flange
45	Washer, Lock, #8, External Tooth, w/Conical Washer
46	Screw, 6-32 x 3/8, Flat Head
47	Screw, 10-32 x 3 3/16, Flat Head, SS
48	Screw, 4-40 x 3/8, Flat Head
49	Screw, 6-32 x 1/2, Hex Head, Slotted, w/Washer
50	Nut, KEP, 4-40, w/Conical Washer
51	Nut, Hex, 4-40
52	Screw, 4-40 x 7/16, Pan Head, Phillips
53	Screw, 6-24 x 5/8, Pan Head, Phillips
54	Screw, 1/4, Pan Head, Thread Cutting
55	Washer, Flat, #4, .032 Thk.
56	Screw, 4-24 x 5/8, Pan Head, Phillips
57	Screw, 6-32 x 1/4, Hex Head, Slotted, w/Washer
58	Screw, 10-32 x 1, Hex Head, Slotted, w/Washer
59	Screw, 10-32 x 1.75, Hex Head, Slotted, w/Washer
60	Screw, 2-56 x 1/4, Pan Head, Phillips, w/Conical Washer
61	Standoff, Hex, 2-56 x 1/2, Nickel Plate
62	Spacer, Hex, 6-32 x 1.125, M/F

Table 9-2. Illustrated Parts Breakdown	
Index Number	**Nomenclature**
63	Washer, Flat, #6, Nylon
64	Screw, Cap, 8-32 x 1/2, Socket Head
65	Spring, .180 x .188
66	Screw, Shoulder, 4-40 x 3/16, Socket Head
67	Screw, 2-32 x 1/2, Pan Head, Thread Cutting
68	Screw, 10-32 x 1.14, Hex Head, w/Washer
69	Washer, #10, .022 Thk., Internal Tooth
70	Screw, 10-32 x 2.5, Hex Head, Weathered
71	Washer, Lock, #10, .022 Thk., Internal Tooth
72	Screw, 2-56 x 1/4, Hex
73	Holder, Spring, Knob
74	Spring, .180 x .625 x .024
75	Screw, Cap, 4-40 x 3/8, Socket Head

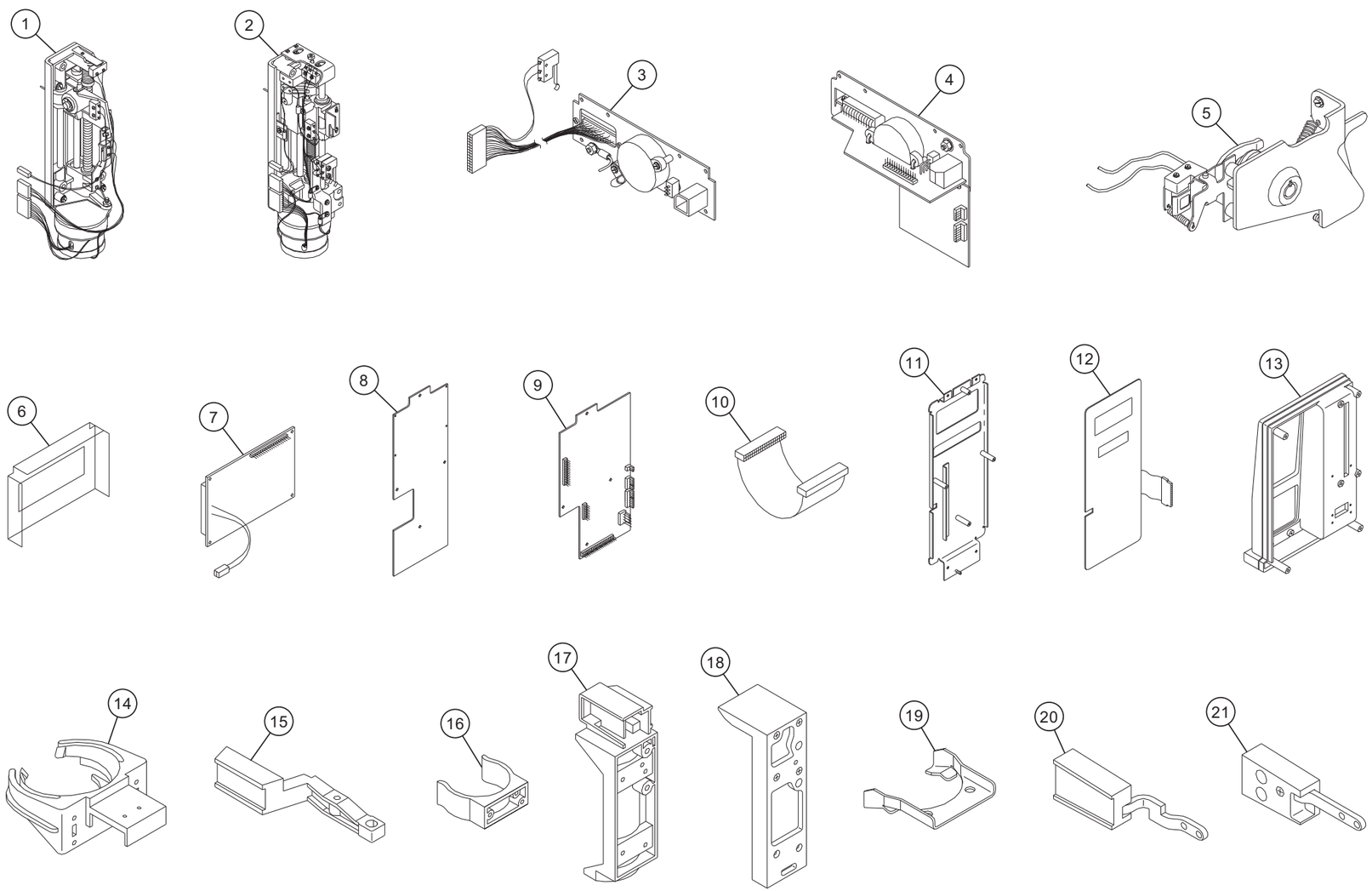

HOSPIRA, INC.	
Figure 9-1. Illustrated Parts Breakdown	
DRAWING NO. NOT APPLICABLE	Rev. N/A
	Sheet 1 of 16

This page intentionally left blank.

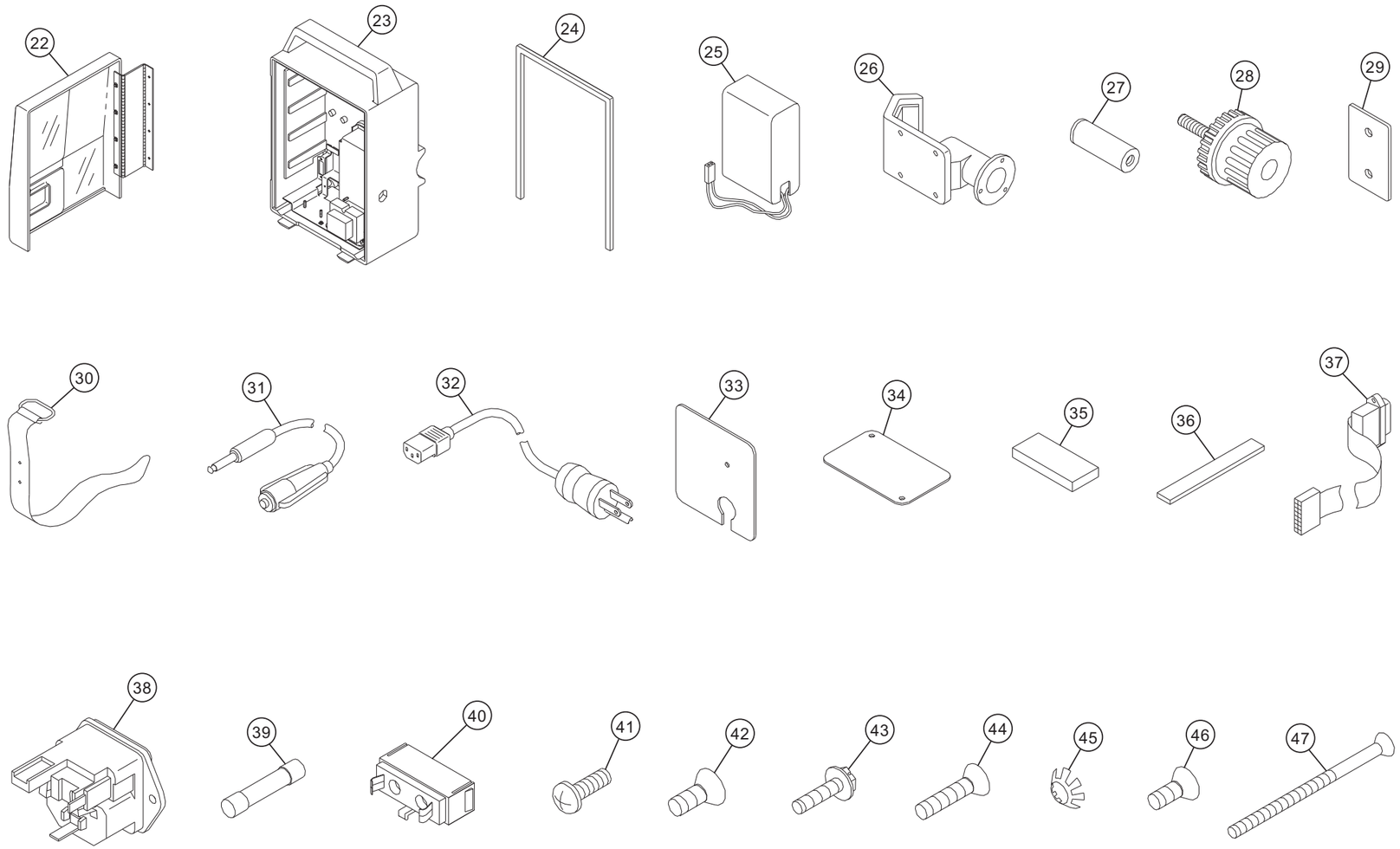

HOSPIRA, INC.	
Figure 9-1. Illustrated Parts Breakdown	
DRAWING NO. NOT APPLICABLE	Rev. N/A
	Sheet 2 of 16

This page intentionally left blank.

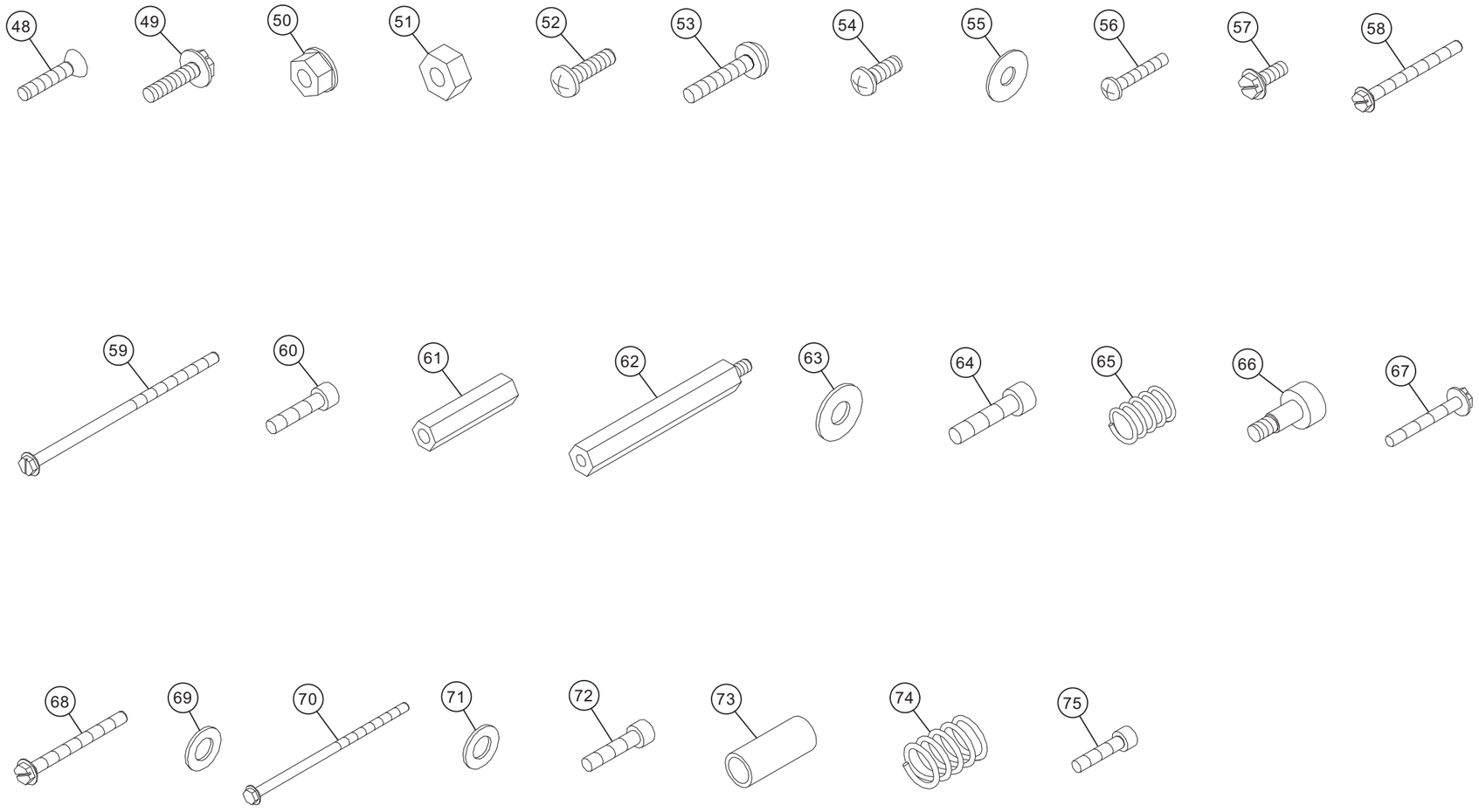

HOSPIRA, INC.	
Figure 9-1. Illustrated Parts Breakdown	
DRAWING NO. NOT APPLICABLE	Rev. N/A
	Sheet 3 of 16

This page intentionally left blank.

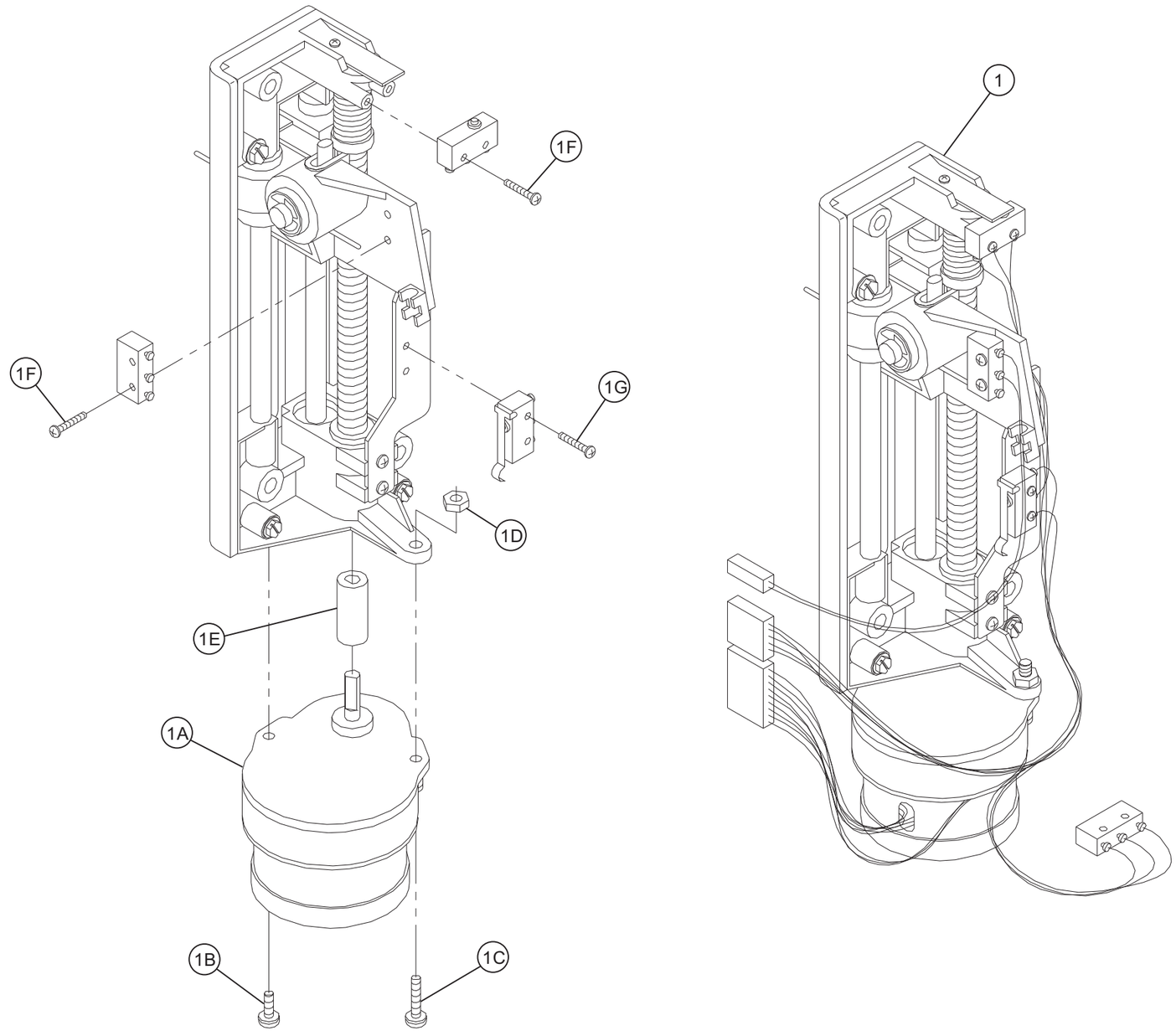

HOSPIRA, INC.	
Figure 9-1. Illustrated Parts Breakdown	
DRAWING NO. NOT APPLICABLE	Rev. N/A
	Sheet 4 of 16

This page intentionally left blank.

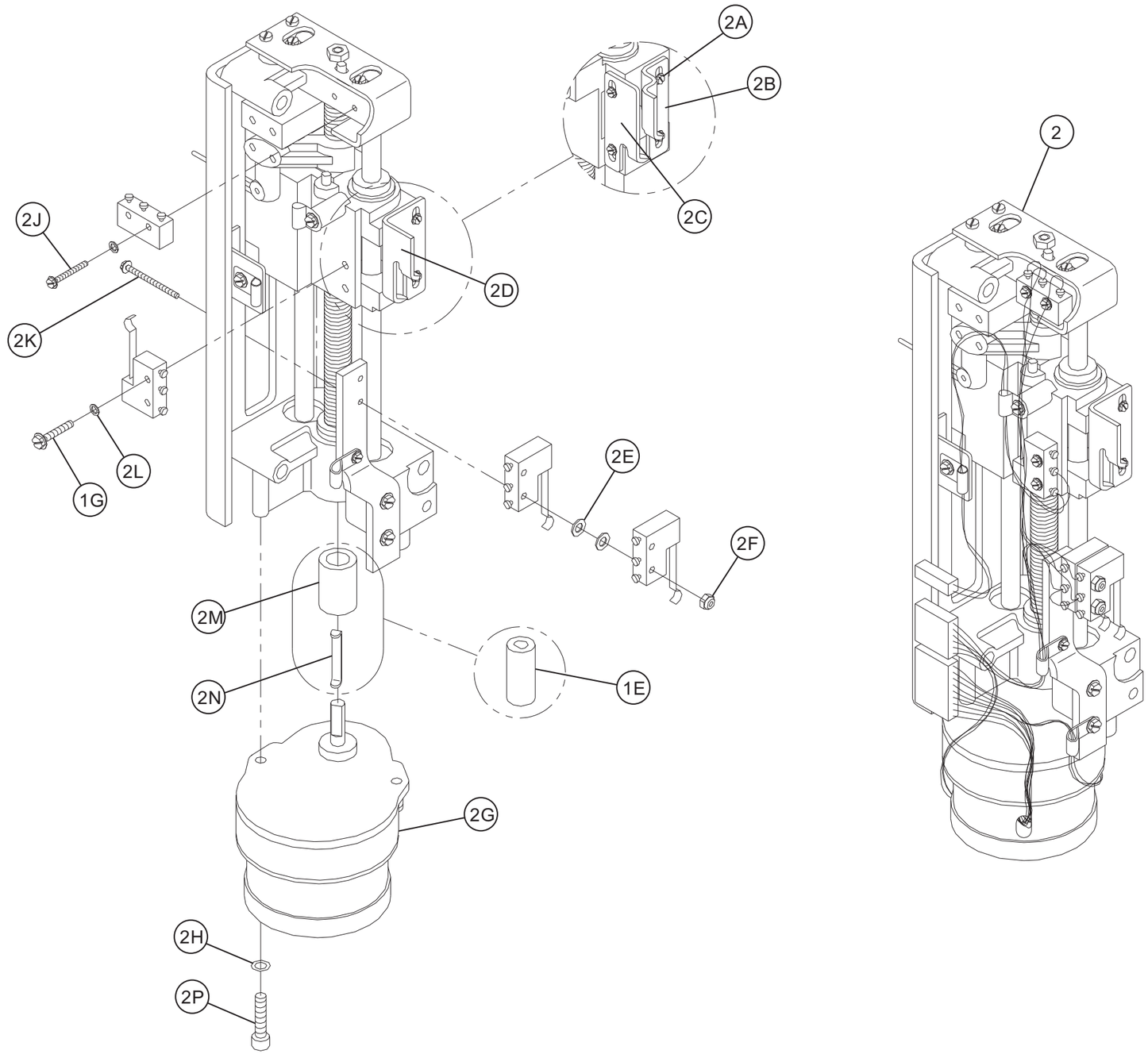

HOSPIRA, INC.	
Figure 9-1. Illustrated Parts Breakdown	
DRAWING NO. NOT APPLICABLE	Rev. N/A
	Sheet 5 of 16

This page intentionally left blank.

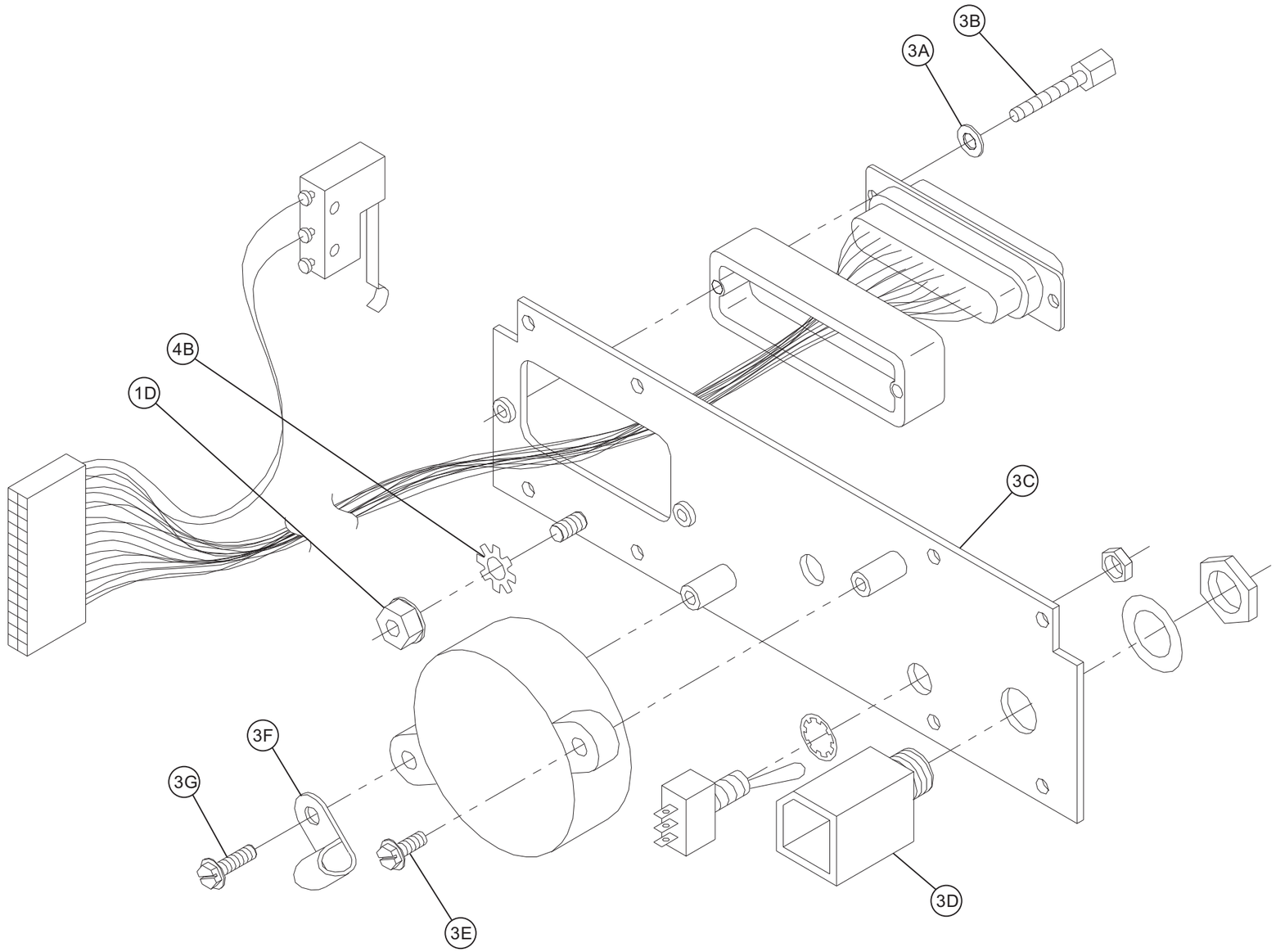

HOSPIRA, INC.	
Figure 9-1. Illustrated Parts Breakdown	
DRAWING NO. NOT APPLICABLE	Rev. N/A
	Sheet 6 of 16

This page intentionally left blank.

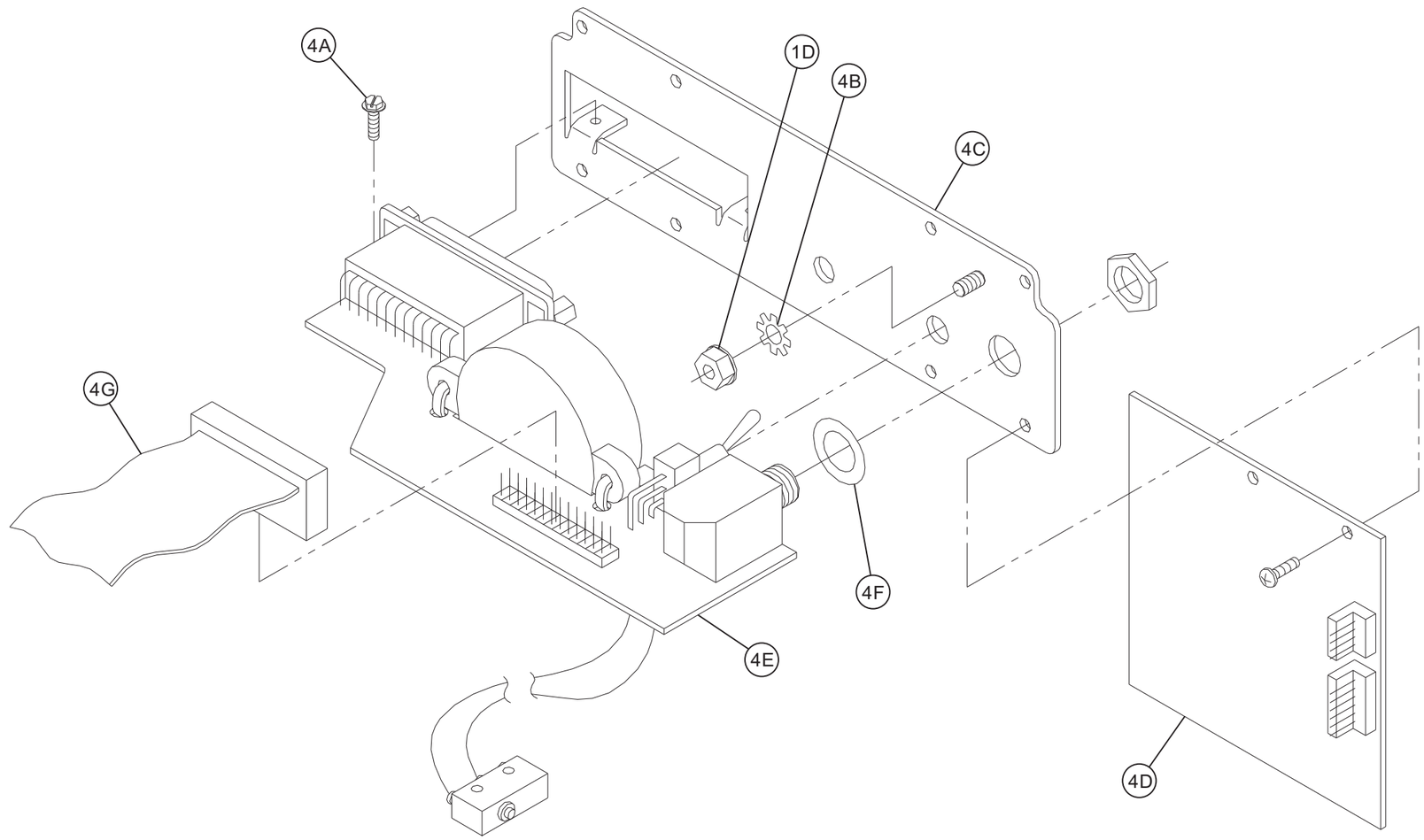

HOSPIRA, INC.	
Figure 9-1. Illustrated Parts Breakdown	
DRAWING NO. NOT APPLICABLE	Rev. N/A
	Sheet 7 of 16

This page intentionally left blank.

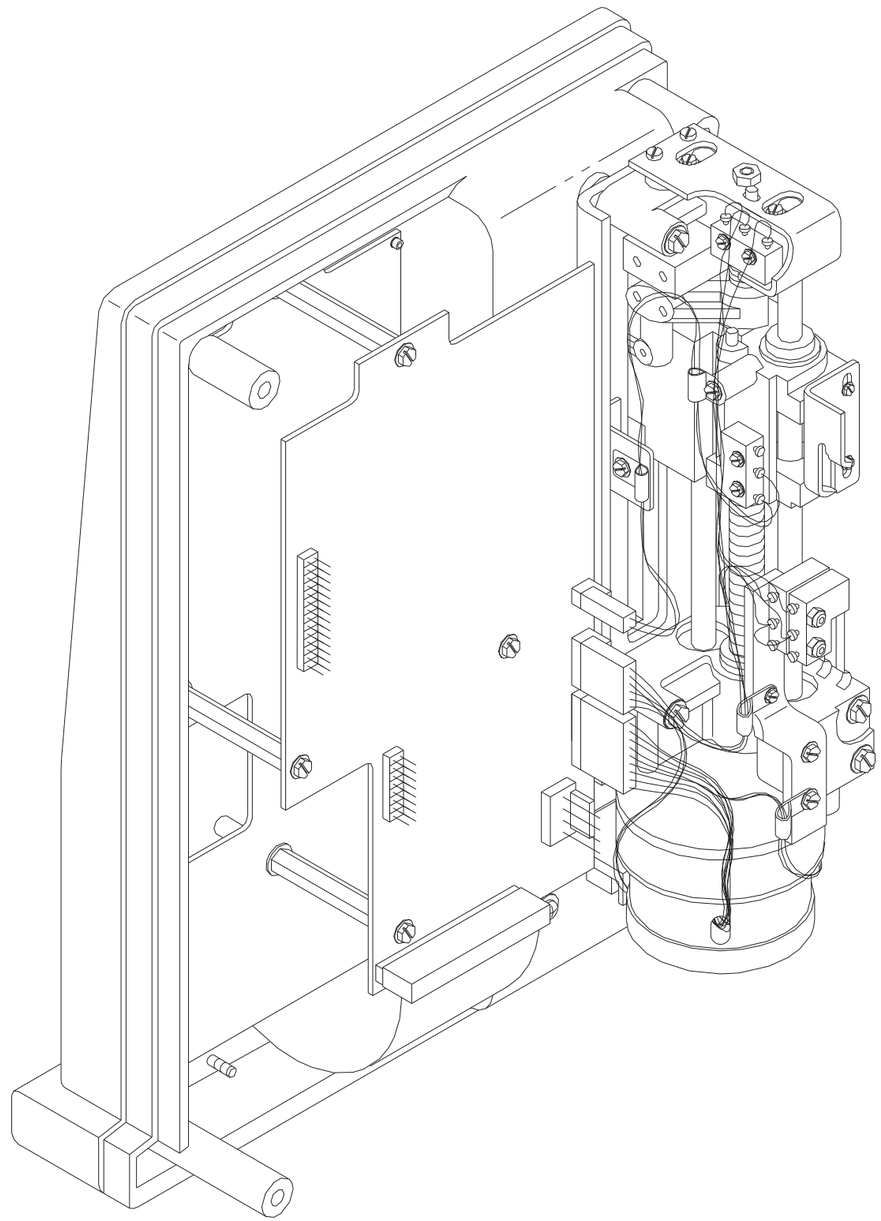

HOSPIRA, INC.	
Figure 9-1. Illustrated Parts Breakdown	
DRAWING NO. NOT APPLICABLE	Rev. N/A
	Sheet 8 of 16

This page intentionally left blank.

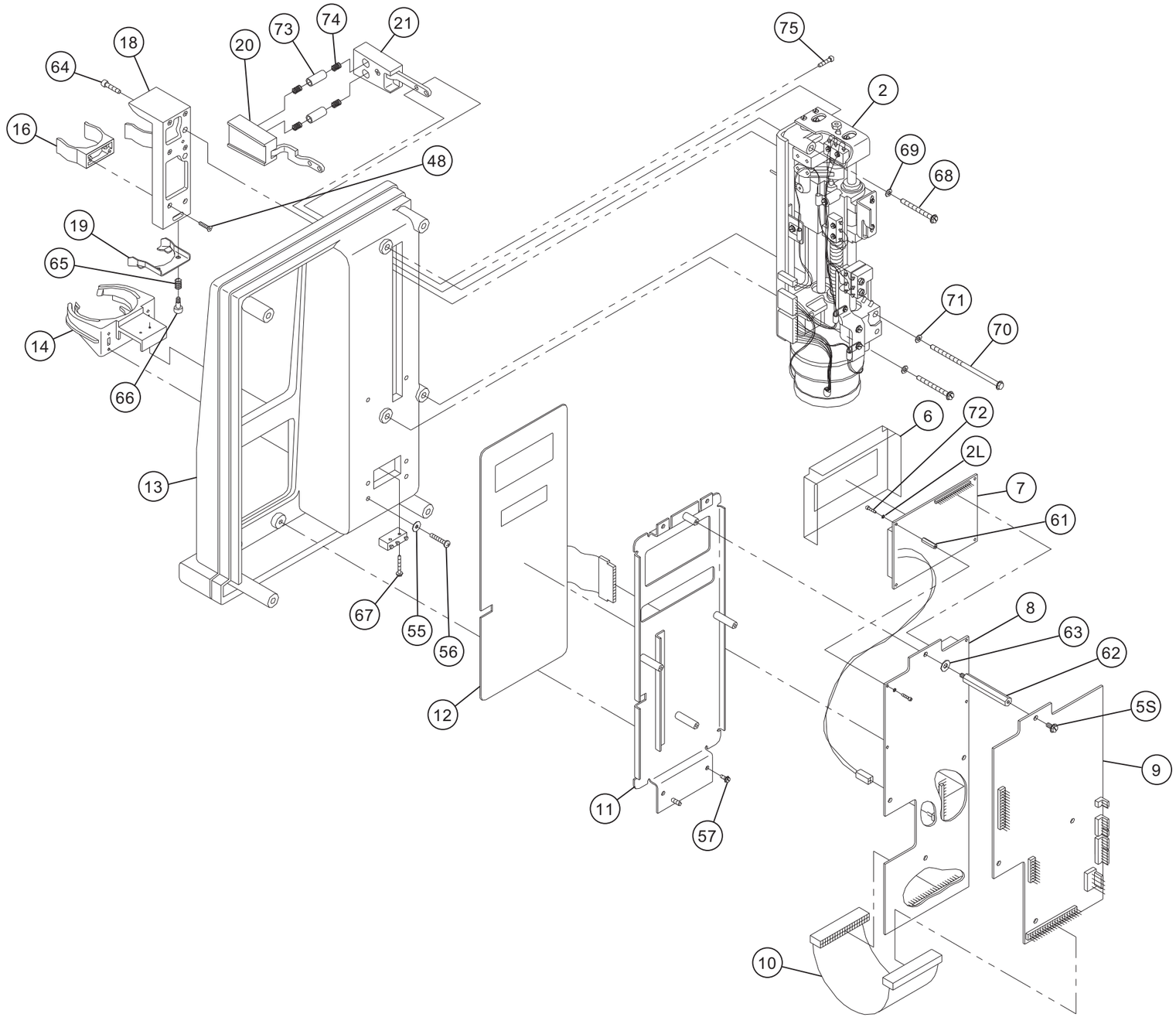

HOSPIRA, INC.	
Figure 9-1. Illustrated Parts Breakdown	
DRAWING NO. NOT APPLICABLE	Rev. N/A
	Sheet 9 of 16

This page intentionally left blank.

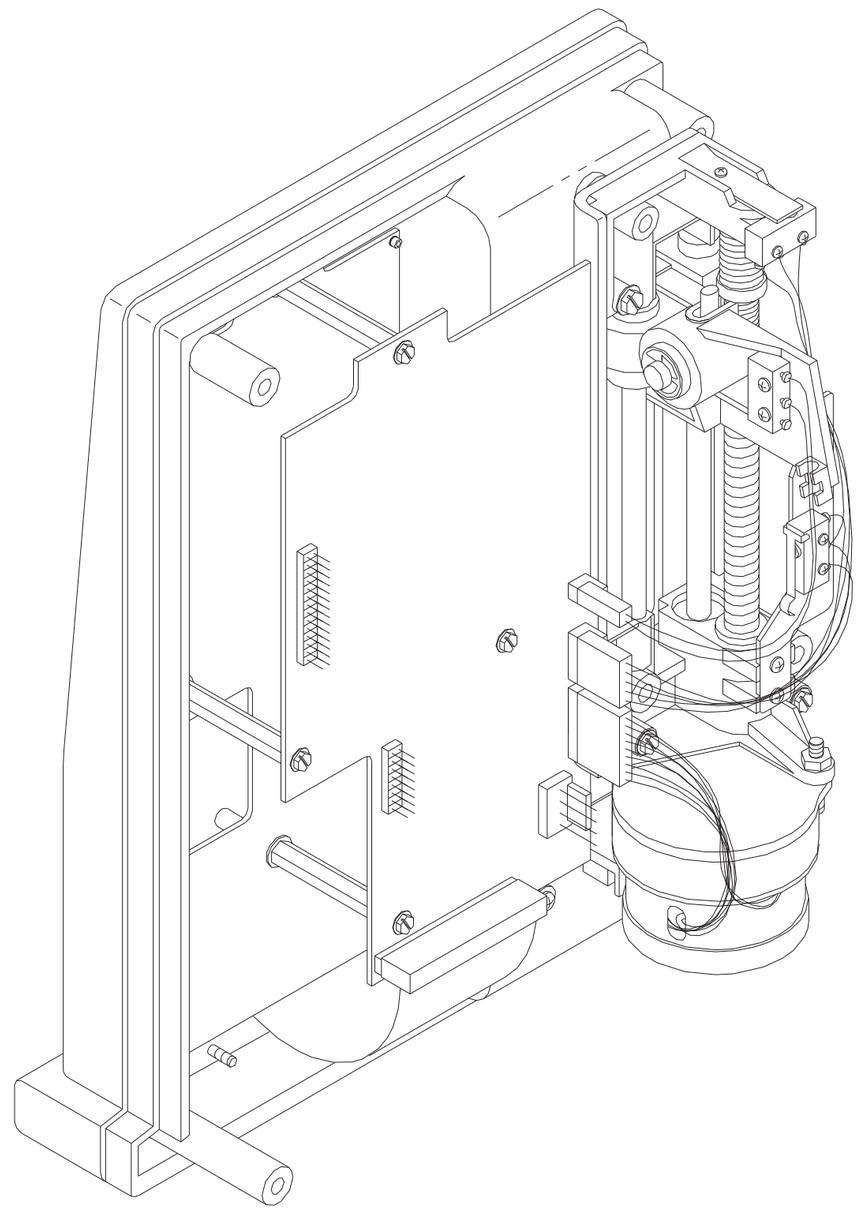

HOSPIRA, INC.	
Figure 9-1. Illustrated Parts Breakdown	
DRAWING NO. NOT APPLICABLE	Rev. N/A
	Sheet 10 of 16

This page intentionally left blank.

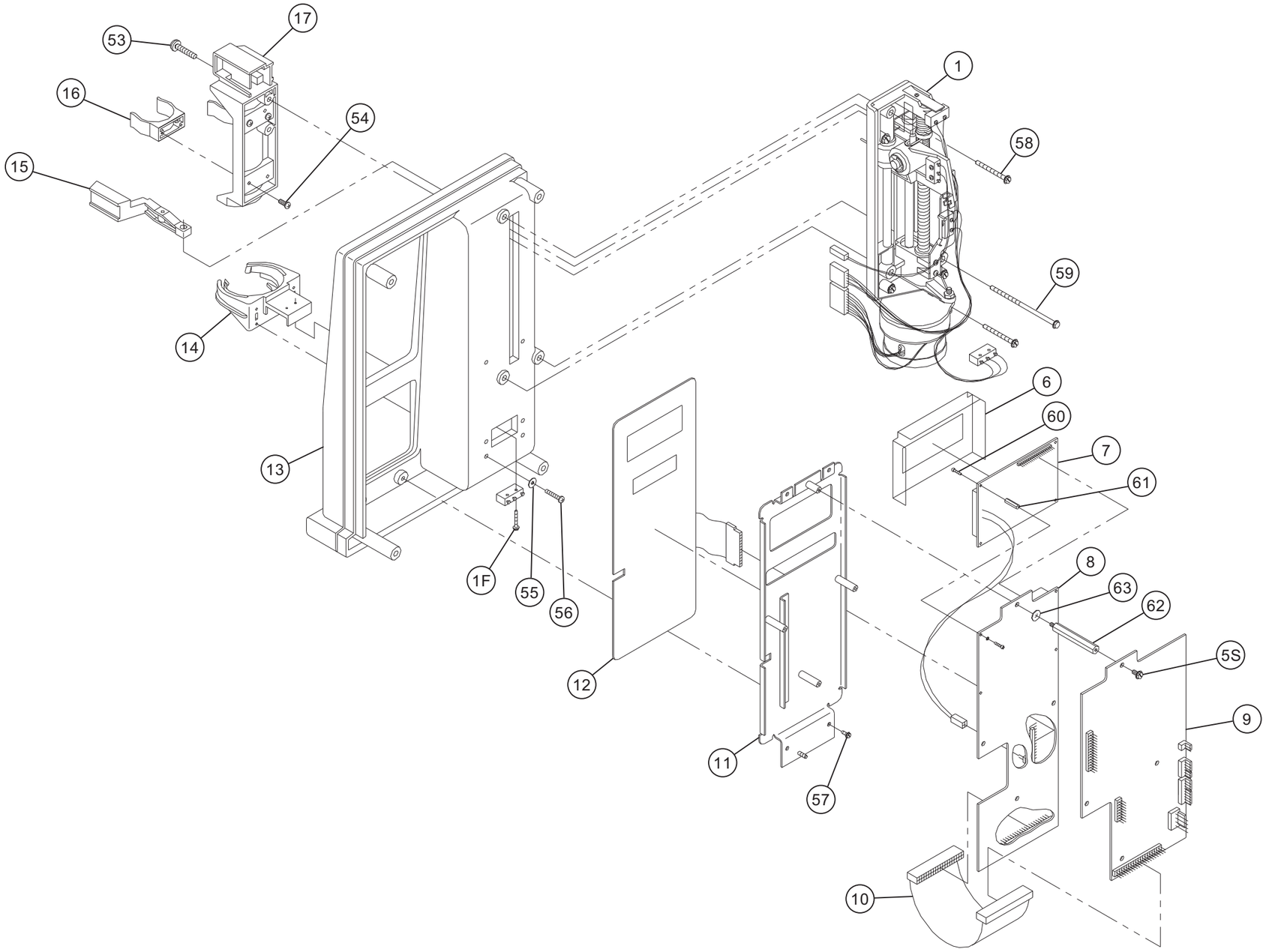

HOSPIRA, INC.	
Figure 9-1. Illustrated Parts Breakdown	
DRAWING NO. NOT APPLICABLE	Rev. N/A
	Sheet 11 of 16

This page intentionally left blank.

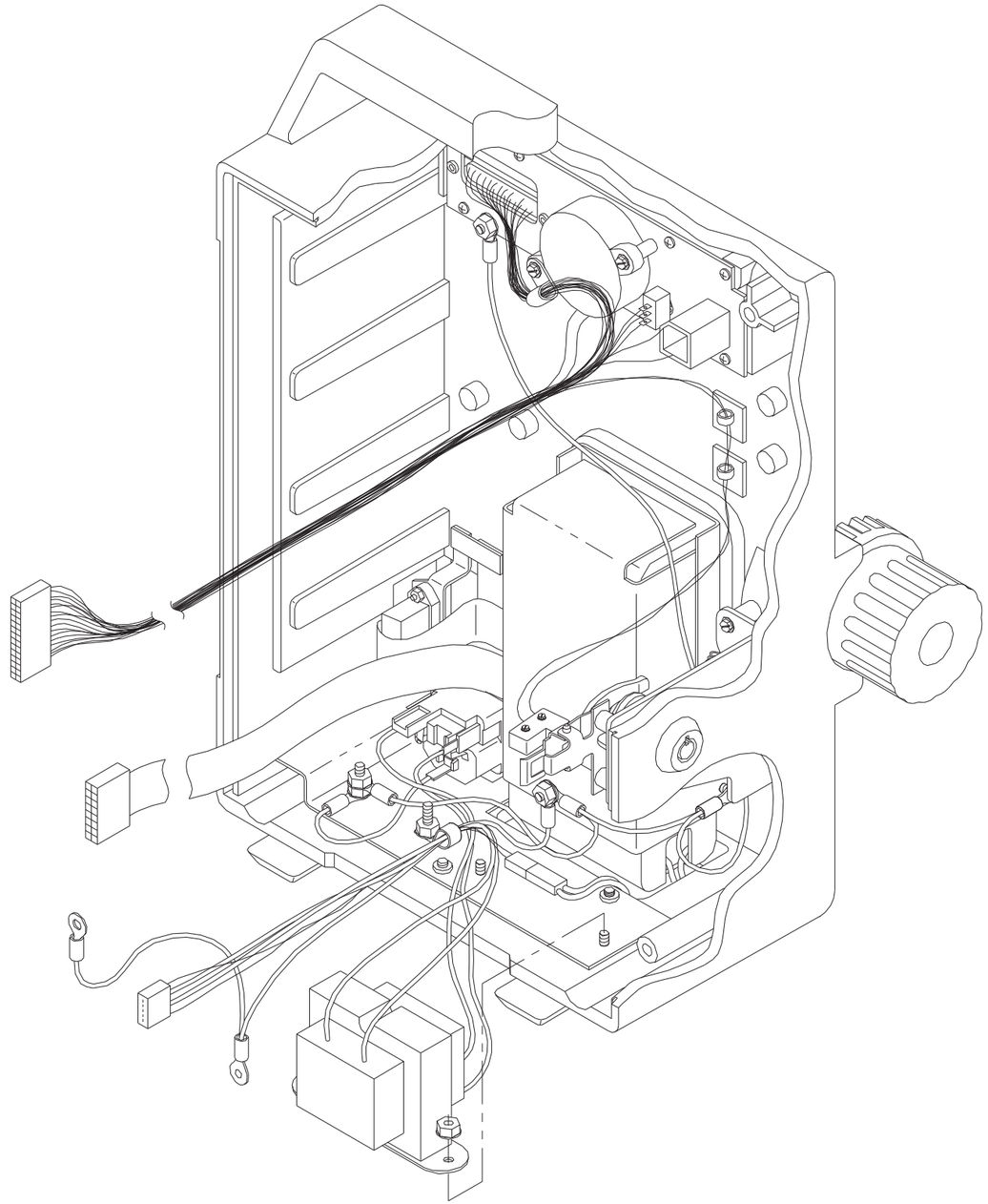

HOSPIRA, INC.	
Figure 9-1. Illustrated Parts Breakdown	
DRAWING NO. NOT APPLICABLE	Rev. N/A
	Sheet 12 of 16

This page intentionally left blank.

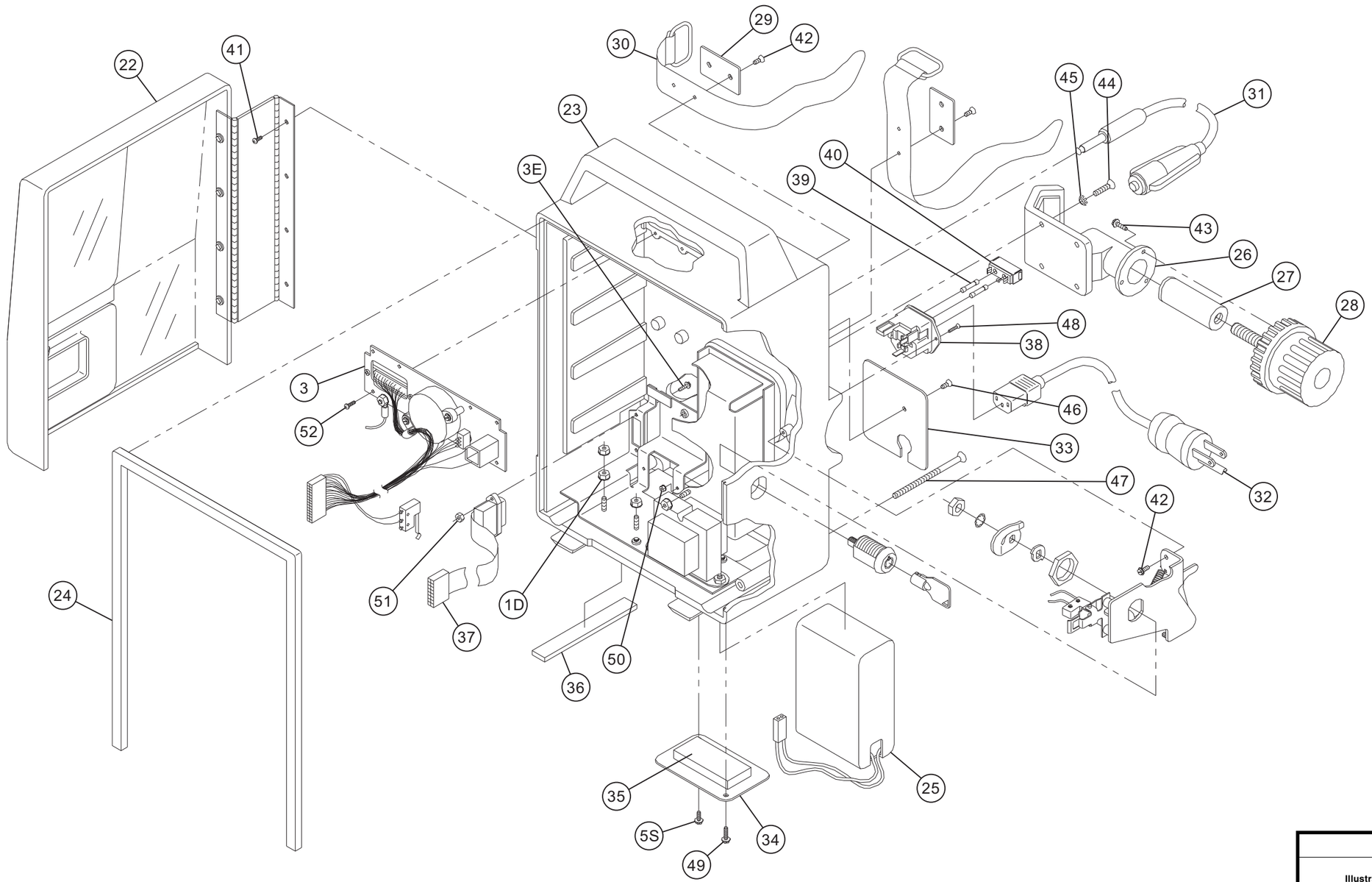

HOSPIRA, INC.	
Figure 9-1. Illustrated Parts Breakdown	
DRAWING NO. NOT APPLICABLE	Rev. N/A
	Sheet 13 of 16

This page intentionally left blank.

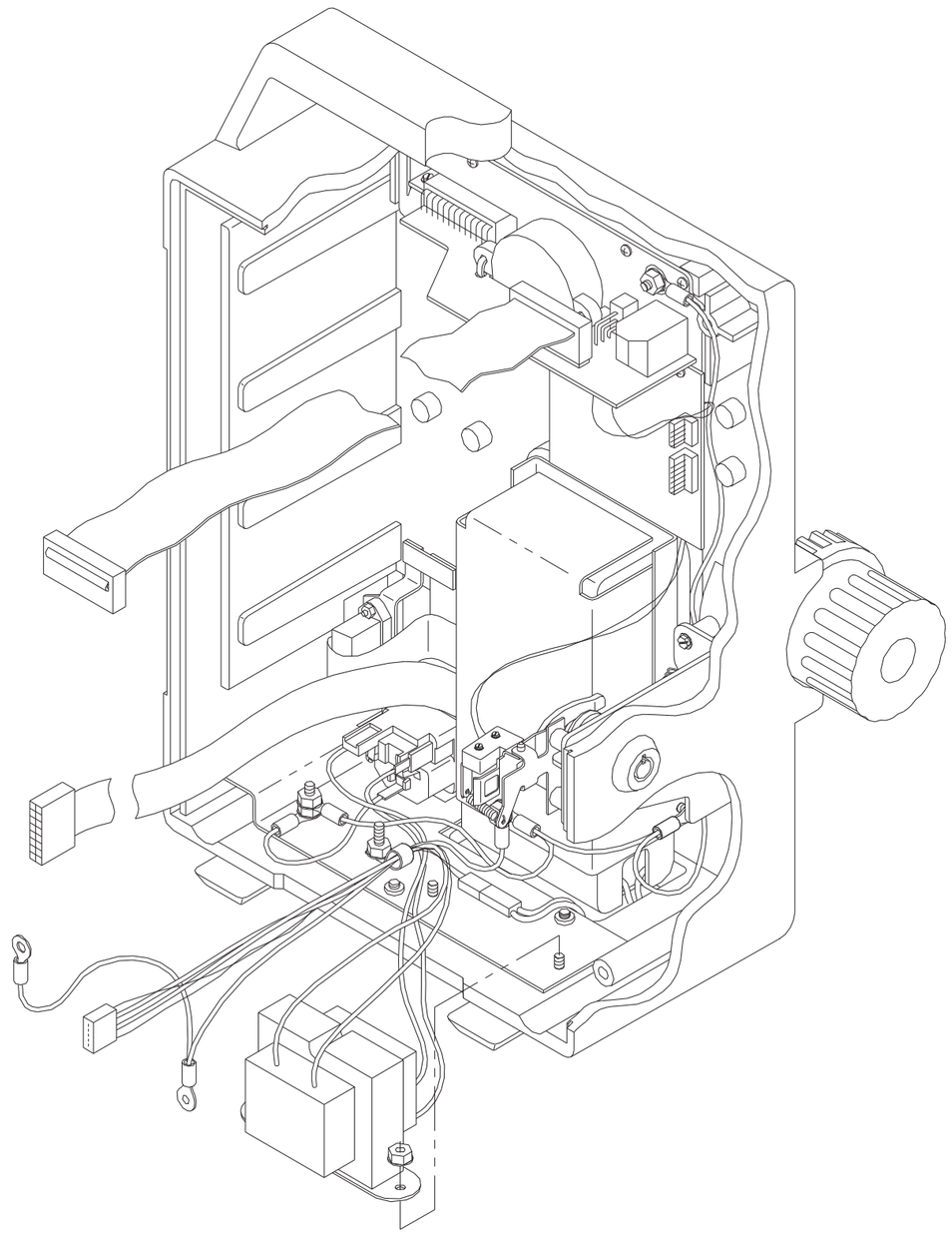

HOSPIRA, INC.	
Figure 9-1. Illustrated Parts Breakdown	
DRAWING NO. NOT APPLICABLE	Rev. N/A
	Sheet 14 of 16

This page intentionally left blank.

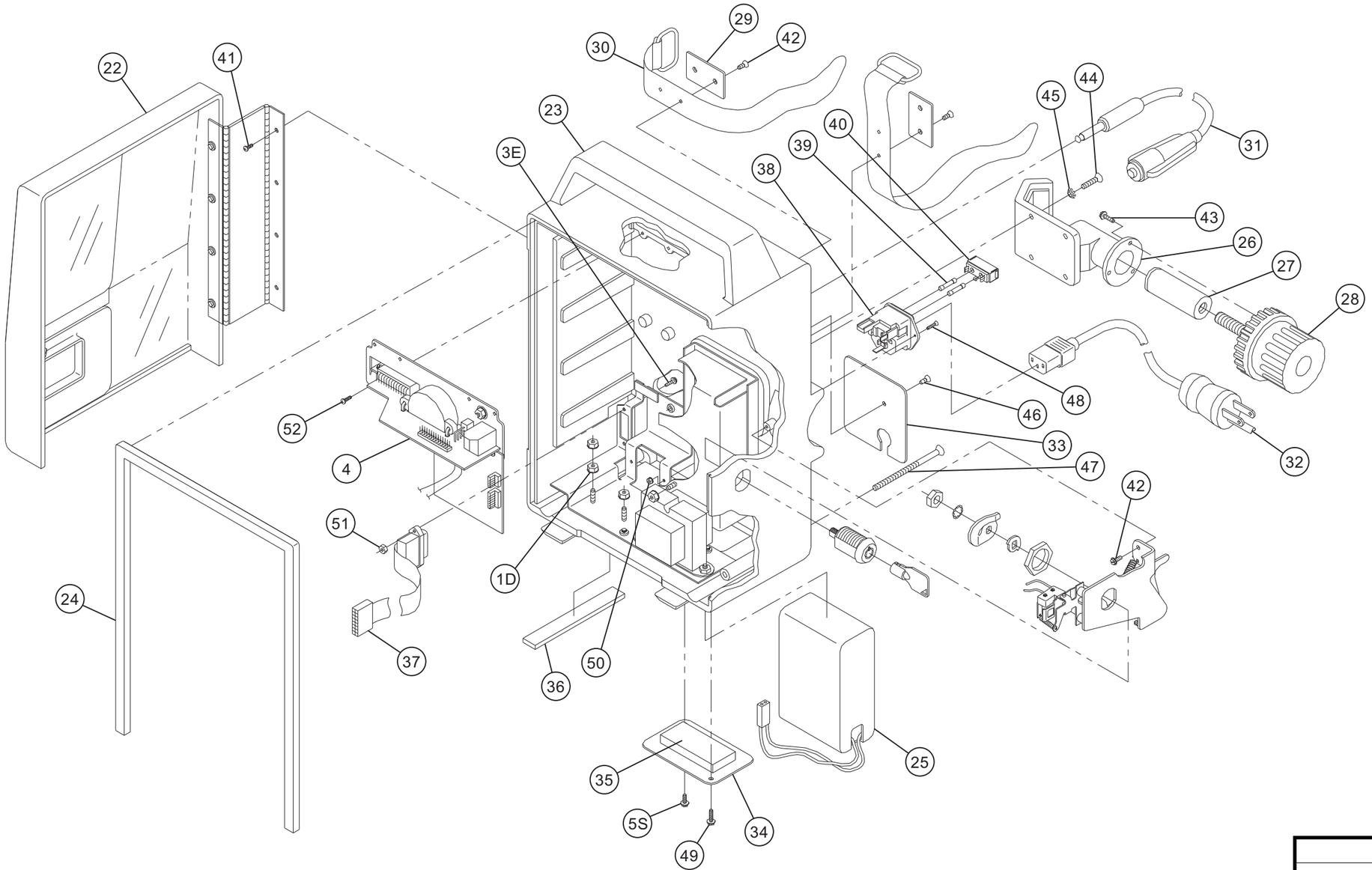

HOSPIRA, INC.	
Figure 9-1. Illustrated Parts Breakdown	
DRAWING NO. NOT APPLICABLE	Rev. N/A
	Sheet 15 of 16

This page intentionally left blank.

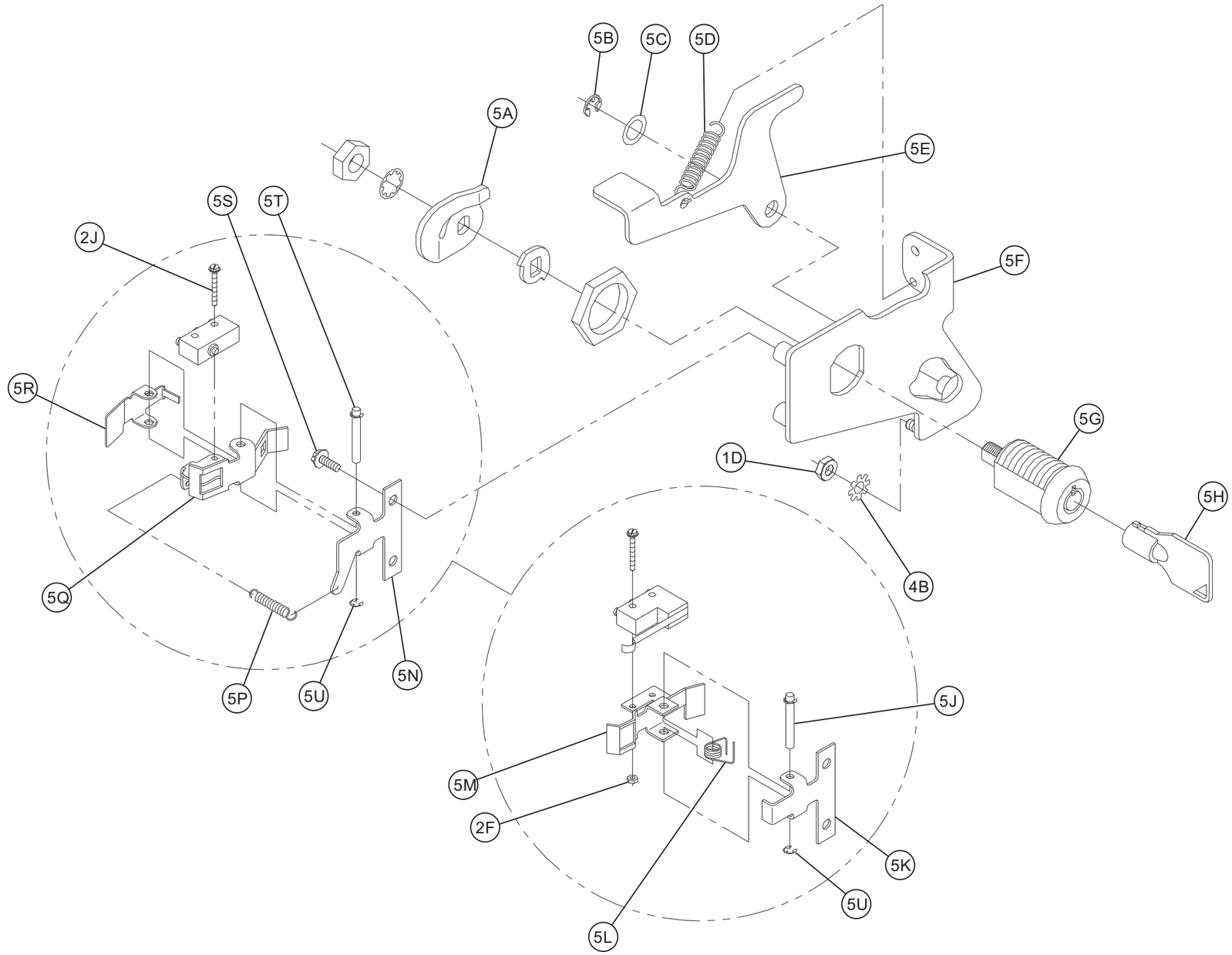

HOSPIRA, INC.	
Figure 9-1. Illustrated Parts Breakdown	
DRAWING NO. NOT APPLICABLE	Rev. N/A
	Sheet 16 of 16

This page intentionally left blank.

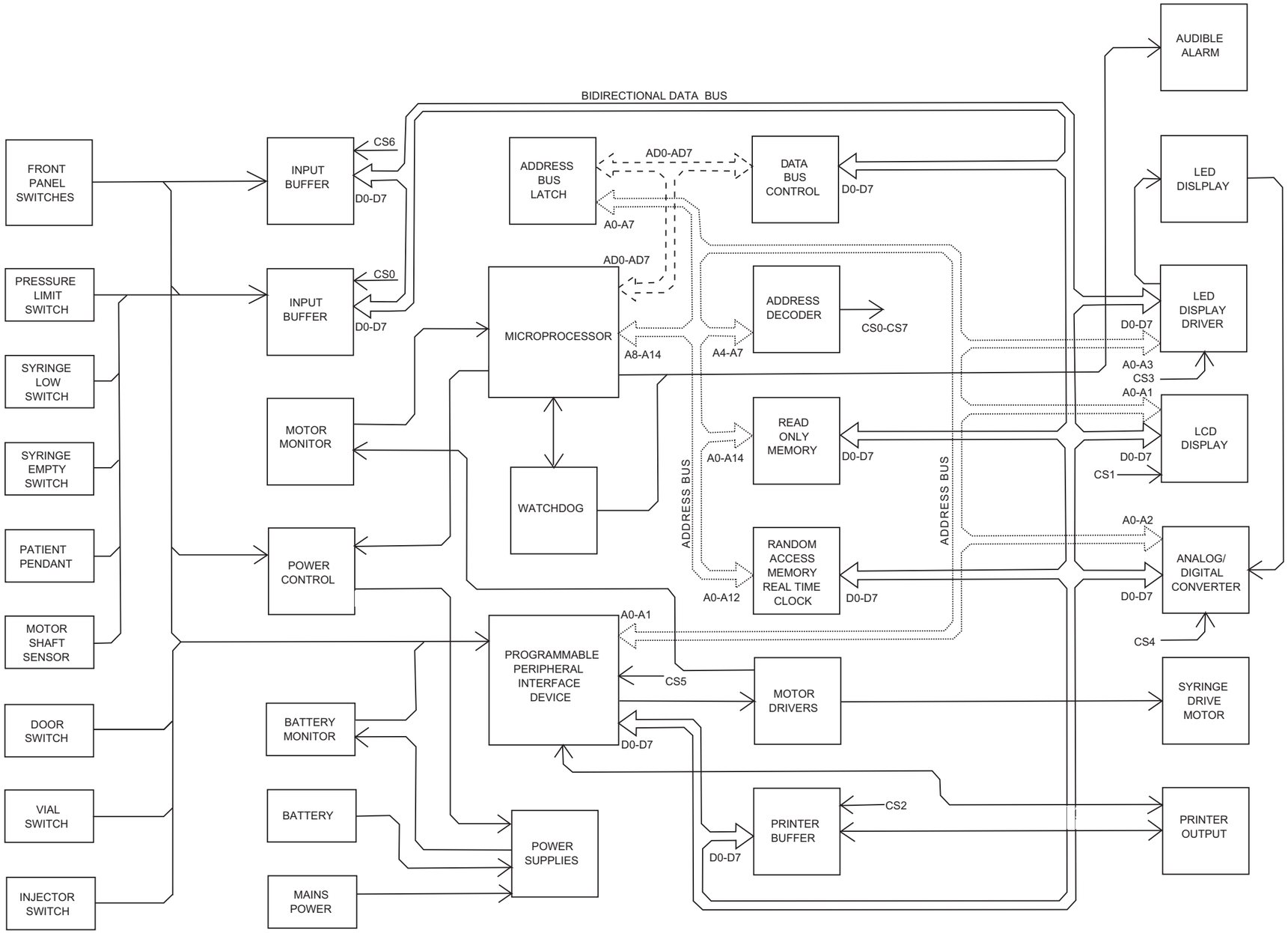

HOSPIRA, INC.	
Figure 9-2. Block Diagram	
DRAWING NO. NOT APPLICABLE	Rev. N/A
	Sheet 1 of 1

This page intentionally left blank.

Section 10

INDEX

Numerics

A

B

C

D

E

F

G

I

L

M

O

P

R

S

T

U

V

W

For technical assistance, product return authorization, and to order parts, accessories, or manuals within the United States, contact Hospira.

1-800-241-4002

For additional services and technical training courses, visit the website at **www.hospira.com**.

For technical assistance and services outside the United States, contact the local Hospira sales office.

CAUTION: Federal (USA) law restricts this infuser to sale by or on the order of a physician or other licensed practitioner.

WARNING: EXPLOSION HAZARD EXISTS IF THE INFUSION SYSTEM IS USED IN THE PRESENCE OF FLAMMABLE SUBSTANCES.

Attention, consult accompanying documents

Type CF

Provides adequate degree of protection against electrical shock and suitable for application to patient

IPX1 Protected against dripping water

Class 1 Mains supply equipment using protective earth

UL 60601-1
CSA 601.1
MCN 160992

C US

IEC 60601-1
IEC 60601-2-24

The 'C' and 'US' indicators adjacent to the CSA Mark signify that the product has been evaluated to the applicable CSA and ANSI/UL Standards, for use in Canada and the U.S., respectively. This 'US' indicator includes products eligible to bear the 'NRTL' indicator. NRTL (National Recognized Testing Laboratory), is a designation granted by the U.S. Occupational Safety and Health Administration (OSHA) to laboratories which have been recognized to perform certification to U.S. Standards.

Printed in USA